International Atomic Weights, 1925

Name	Symbol	Atomic Weight	Name	Symbol	Atomic Weight
Aluminum	Al	26.97	Manganese	Mn	54.93
Antimony	Sb	121.77	Mercury	Hg	200.61
Argon	A	39.91	Molybdenum	Mo	96.0
Arsenic	As	74.96	Neodymium	Nd	144.27
Barium	Ba	137.37	Neon	Ne	20.2
Bismuth	Bi	209.00	Nickel	Ni	58.69
Boron	B	10.82	Nitrogen	N	14.008
Bromine	Br	79.916	Osmium	Os	190.8
Cadmium	Cd	112.41	Oxygen	O	16.000
Caesium	Cs	132.81	Palladium	Pd	106.7
Calcium	Ca	40.07	Phosphorus	P	31.027
Carbon	C	12.000	Platinum	Pt	195.23
Cerium	Ce	140.25	Potassium	K	39.096
Chlorine	Cl	35.457	Praseodymium	Pr	140.92
Chromium	Cr	52.01	Radium	Ra	225.95
Cobalt	Co	58.94	Radon (Niton)	Rn	222.0
Columbium	Cb	93.1	Rhodium	Rh	102.91
Niobium	Nb		Rubidium	Rb	85.44
Copper	Cu	63.57	Ruthenium	Ru	101.7
Dysprosium	Dy	162.52	Samarium	Sa	150.43
Erbium	Er	167.7	Scandium	Sc	45.10
Europium	Eu	152.0	Selenium	Se	79.2
Fluorine	F	19.00	Silicon	Si	28.06
Gadolinium	Gd	157.26	Silver	Ag	107.880
Gallium	Ga	69.72	Sodium	Na	22.997
Germanium	Ge	72.60	Strontium	Sr	87.63
Glucinum	Gl	9.02	Sulfur	S	32.064
Beryllium	Be		Tantalum	Ta	181.5
Gold	Au	197.2	Tellurium	Te	127.5
Helium	He	4.00	Terbium	Tb	159.2
Holmium	Ho	163.4	Thallium	Tl	204.39
Hydrogen	H	1.008	Thorium	Th	232.15
Indium	In	114.8	Thulium	Tm	169.4
Iodine	I	126.932	Tin	Sn	118.70
Iridium	Ir	193.1	Titanium	Ti	48.1
Iron	Fe	55.84	Tungsten	W	184.0
Krypton	Kr	82.9	Uranium	U	238.17
Lanthanum	La	138.91	Vanadium	V	50.96
Lead (ordinary)	Pb	207.20	Xenon	Xe	130.2
Lead (Uranium)	Pb	206.06	Ytterbium	Yb	173.6
Lithium	Li	6.939	Yttrium	Y	88.9
Lutecium	Lu	175.0	Zinc	Zn	65.38
Magnesium	Mg	24.32	Zirconium	Zr	91.0

JONES BOOK STORE
1424 J ST.
SACRAMENTO

S0-DGL-858

LABORATORY MANUAL

Arranged to Accompany

"PRINCIPLES OF GENERAL CHEMISTRY"

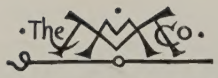

THE MACMILLAN COMPANY
NEW YORK · BOSTON · CHICAGO · DALLAS
ATLANTA · SAN FRANCISCO

MACMILLAN & CO., LIMITED
LONDON · BOMBAY · CALCUTTA
MELBOURNE

THE MACMILLAN CO. OF CANADA, LTD.
TORONTO

LABORATORY MANUAL

Arranged to Accompany

"PRINCIPLES OF GENERAL CHEMISTRY"

BY

STUART R. BRINKLEY

AND

ERWIN B. KELSEY

ASSISTANT PROFESSORS OF CHEMISTRY, YALE UNIVERSITY

New York

THE MACMILLAN COMPANY

1926

All rights reserved

PRINTED IN THE UNITED STATES OF AMERICA

COPYRIGHT, 1926,
BY THE MACMILLAN COMPANY.

Set up and electrotyped. Published August, 1926.

Norwood Press
J. S. Cushing Co. — Berwick & Smith Co.
Norwood, Mass., U.S.A.

PREFACE.

This Laboratory Guide is designed to furnish directions for experimental work to accompany "Principles of General Chemistry." In order to obtain the best results in laboratory work, the student experiments should deal with substances about which the student is hearing in his classroom work at the time. The authors have endeavored to arrange the material so as to afford this correlation in all cases in which the experimental material does not require technique too complicated for successful work on the part of inexperienced students.

The authors' experience in the laboratory instruction of students, who have had a secondary school course in chemistry, justifies the inclusion of many experiments of an elementary nature. Many such students have actually performed few experiments, and have not yet developed the experimental skill requisite to more advanced work. The thoughtful performance of simple experiments, even though it involves some repetition, affords an opportunity to obtain from personal experience a knowledge of the properties and reactions of substances. The students who have not previously studied chemistry require the selection of these simpler experiments, particularly at the beginning of the course.

It is not expected that all of the experiments in each exercise can be performed in the time allotted to laboratory work in the majority of courses in general chemistry. Since the number of laboratory hours per week and the needs of the student vary greatly, a number of experiments on each topic have been included. From these, the experiments suited to the preference of the Instructor, and to the ability of the student, can be selected, so as to conform to the order followed in the classroom text.

It need not be considered necessary that all students in a given course perform the same experiments. The more skilled workers may be assigned special experiments. In some cases, it will be found that certain inorganic preparations taken from the latter part of the manual are adapted to the needs of such students. Occasionally, the best students may be assigned the problem

type of experiment, and may be allowed to devise their own procedure by reference to library material, and to proceed with the experiment after consultation with the Instructor.

A laboratory exercise on "Hydrogen" has been introduced to accompany the text chapter on "Reactions of Gases." There are no simple experiments which directly parallel this chapter. This exercise will be of value particularly to the beginning student.

The exercises which involve analytical separations are not designed to be a substitute for Qualitative Analysis. They are intended to emphasize principles and reactions of metal ions and to show to the student at this stage of his work an application of specific reactions of substances.

Detailed description of the operation of weighing has been omitted from the manual, because the type of balance furnished and the methods preferred by the Instructor differ so greatly. Usually personal instruction and demonstration are required for a class of elementary students.

S. R. B.
E. B. K.

New Haven, Conn.
July, 1926.

CONTENTS.

International Atomic Weights, 1925. *Inside front cover*

EXERCISE		PAGE
	Directions for the Student	ix
I.	Preliminary Operations. Physical and Chemical Change	1
II.	Percentage Composition. Combining Weights	8
III.	Oxygen. Direct Union. Basic Oxides	12
IV.	Acidic Oxides	18
V.	Hydrogen. Displacement	22
VI.	Properties of Solutions	26
VII.	Evidence of Ionization. Properties of Electrolytes	31
VIII.	Quantitative Determination of the Solubility of a Salt	36
IX.	Colloids	39
X.	Acids 1. Preparation of Acids	44
XI.	Acids 2. General Reactions of Acids. The Hydro-Acids	48
XII.	Acids 3. The Oxy-Nitrogen Acids	52
XIII.	Acids 4. Sulfuric Acid and Other Ternary Acids	58
XIV.	Bases	63
XV.	Acidimetry. Alkalimetry	69
XVI.	Salts 1. The Halides	73
XVII.	Salts 2. Nitrates. Sulfates. Sulfides	78
XVIII.	Salts 3. Carbonates. Silicates. Phosphates. Arsenates. Arsenites. Borates	83
XIX.	Equilibrium in Solution	87

EXERCISE		PAGE
XX.	Non-Metals 1. The Halogens	92
XXI.	Non-Metals 2. Nitrogen. Sulfur. The Phosphorus Family. Silicon	98
XXII.	Oxidation-Reduction 1. Compounds of Chromium	104
XXIII.	Oxidation-Reduction 2. Compounds of Manganese	109
XXIV.	Separation of the Metal Ions into Analytical Groups	113
XXV.	Metals 1. Activity of Metals. The Alkali and Alkaline Earth Metals	116
XXVI.	Metals 2. Magnesium. Zinc. Aluminum. Iron	120
XXVII.	Metals 3. Tin. Lead. Copper. Mercury	123
XXVIII.	Qualitative Separations	126
XXIX.	Electromotive Chemistry	131
XXX.	Carbon Monoxide. Saturated Hydrocarbons and Derivatives	134
XXXI.	Unsaturated Hydrocarbons and Derivatives	139
XXXII.	Determination of a Transition Point	141
XXXIII.	Preparation of Lead Dioxide	142
XXXIV.	Preparation of Chromic Anhydride from Sodium Dichromate	143
XXXV.	Preparation of Ammonium Dichromate	144
XXXVI.	Preparation of Boric Acid	145
XXXVII.	Preparation of Arsenic Acid	146
XXXVIII.	Preparation of Copper Ammonia Sulfate	147
XXXIX.	Preparation of Sodium Thiosulfate	148
XL.	Preparation of Cupric Ammonium Sulfate	149
XLI.	Preparation of Ferrous Ammonium Sulfate	150
XLII.	Preparation of Alum from Cryolite	151

EXERCISE		PAGE
XLIII.	Preparation of Chrome Alum . . .	153
XLIV.	Preparation of Strontium Chloride from Strontium Sulfate	154
XLV.	Preparation of Potassium Perchlorate .	155
XLVI.	Preparation of Oxalic Acid . . .	156
XLVII.	Preparation of Mercuric Thiocyanate	157
	Concentrations of Solutions . . .	158

GENERAL DIRECTIONS.

1. *Laboratory rules.* Each student should read carefully the posted statement regarding the regulations and customs of the laboratory.

2. *Equipment.* Each student is responsible for the laboratory equipment which is issued and at the end of the course is charged for those articles which are missing or damaged in any way. At the end of each exercise, all apparatus should be cleaned and put away in the locker in an orderly fashion. Broken articles should be replaced by purchase from the Supply Room in order that there may be no handicap, due to lack of apparatus, in performing the various experiments of the course. Always lock the apparatus drawer when you leave the laboratory.

For certain of the experiments, special apparatus is required. If this is loaned, it should be returned at the conclusion of the experiment, according to the practice of the laboratory in which you are working.

3. *Notebook.* Each student should provide himself with a laboratory notebook. For many reasons a bound notebook about 7×10 inches in size, and containing about 125 pages, is most satisfactory. Your name and the number of your locker should be written on the cover of the notebook.

4. *Notes.* Special directions for the writing of notes and laboratory reports will be issued by the Instructor in charge of the course. In general, your record should include:

(*a*) The number and title of the exercise.
(*b*) The date.
(*c*) A brief, but specific, account of the operations performed, the observations, and the conclusions drawn from each experiment.
(*d*) Equations which represent the reactions which occur.
(*e*) Answers to all questions, both in the body of the exercise and at the end of the exercise.

5. *Taking notes.* The record of the experiment should be written in the notebook at the time the experiment is performed. The printed directions should not be copied. *The notes must not be taken on slips of paper* with the intention of writing up the experiment at a later time. Questions in the body of the exercise should be answered immediately after performing the experiment. Answers to the questions at the end of the exercise should be written in the notebook, following the notes on that exercise, as soon as possible after the close of the laboratory period.

6. *Materials.* Some of the required substances which are used frequently, such as the common acids and bases, are placed on the shelf at each desk. Others will be found on the side shelves, where they are kept permanently, or where they are placed from week to week as required. Always return the bottle to its *proper place* on the shelf. Never take away from the side shelves the bottles which you find there. Avoid spilling chemicals on the floor and on the shelves. When quantities are not specified, *small amounts* are to be used. Never return to the bottle any excess material, but throw it in the waste jar.

7. *Performing the experiment.* The work should be planned so as to permit the most efficient use of the laboratory period. Note carefully which experiments are required as the minimum work of a given exercise. If you do not finish these experiments at the regular period, come back at a make-up period and finish them. Do not be content with doing the minimum required work. Only the slowest workers get no further than the completion of the minimum list. No student will be dismissed before the end of the period. Your aim should be to perform all the experiments you can *do well* during a given period. Always read the complete directions before starting a given experiment. Follow directions carefully and *think* about the experiment as you perform it. Note the properties of the substances which you handle and the changes which they undergo. Remember that in the laboratory you are handling substances, not just hearing about them. Do not attempt to perform undirected experiments without the approval of the Instructor in charge of your laboratory division.

8. *Independent work.* Each student is to work independently except in those cases where specific instructions are issued for the coöperation of two students.

9. *References.* Numbers printed in ordinary type in the body

of the directions refer to sections of this manual. Parenthetical, bold-face arabic numbers refer to pages in "Principles of General Chemistry."

10. *Laboratory assistants.* A small group of students is assigned to a Laboratory Assistant, who should be consulted about any part of the work which is not understood. Do not ask the Assistant to do your thinking for you, but ask him for explanations only after you have endeavored to work out the answer for yourself.

11. *Accidents.* Work carefully and endeavor to avoid accidents and injury to yourself and to others. In case of cuts, burns, and other injuries, even if apparently slight, report them at once to the Assistant for attention.

12. *Dismissal.* At the signal for dismissal, clean and put away your apparatus. Wash the whole of the table top, and report to the Assistant for personal dismissal. Leave your working space as clean as you like to find it.

13. *Textbook.* Always bring to the laboratory your textbook, your laboratory guide, and your notebook. ← Blue book

LABORATORY MANUAL

EXERCISE I.

PRELIMINARY OPERATIONS. PHYSICAL AND CHEMICAL CHANGE.

MATERIALS:[1] Ammonium chloride, copper scrap, fine copper wire, copper sulfate, cream of tartar, iodine, manganese dioxide, potassium chlorate, sand, sugar, sodium bicarbonate. *Solutions:* Lead acetate, mercuric chloride, potassium iodide, silver nitrate.

SPECIAL APPARATUS:[2] Horn pan balance and weights.

Read carefully the general instructions on page ix of this manual.

1. Inspection of Equipment. Remove all the apparatus from your locker and inspect each piece, noting any article which is not in good condition. Check the outfit against the list provided and report any shortage. Make a list of the common laboratory reagents with which your desk is provided, and note the order in which they are arranged. Always keep them in this order.

2. The Bunsen Burner. Refer to the diagram of the Bunsen burner on p. 413 of your textbook and read the accompanying description. Your burner may differ slightly from this, but it operates on the same principle. Experiment with your burner, adjusting the air supply until the flame is yellow. Hold a dry porcelain dish in the upper part of this flame for a moment and note the soot deposited on it. Such a flame is obviously not desirable, and, moreover, is not very hot. Gradually increase the air supply, noting the change in the appearance of the flame, until the burner begins to roar. This is a sign of too much air, which cools the flame considerably. Shut off air slowly until the roaring just stops. This is the most efficient flame for general use.

[1] The common acids (dilute and concentrated), ammonium hydroxide and sodium hydroxide, will not be listed specially, because it is assumed that they are constantly available.

[2] Only apparatus not included in the usual outfit will be listed.

Again increase the air supply until a noisy flame is produced, then slowly shut off the gas supply. Under these conditions, the flame usually "strikes back," *i.e.*, burns at the bottom of the barrel. When this happens, shut off the gas for a moment, then relight the burner.

Secure a properly regulated flame and quickly insert a match into the flame just above the top of the barrel. It will usually be some time before the match ignites. The hottest part of the flame is near the top, just above the inner cone of the flame.

3. Use of the Balances. Various types of balances are employed in chemical work, depending upon the accuracy required. For rough weighing, platform balances are commonly used, and horn pan balances or analytical balances for more careful work. Obtain from the assistant instructions for the use of the type of balance provided in your laboratory. Remember that a delicate balance may be rendered useless if material is spilled on it, or if it is otherwise misused.

4. Cutting Glass Tubing. Place the piece of glass tube (or rod) to be cut on the table and make a short sharp cut with a moistened file at the proper place. Place the file on the table directly underneath the cut, with the scratch uppermost. Bear down gently on the tube to break it. If the tube does not break with gentle pressure, make the cut deeper.

5. Fire Polishing. Glass tubing which is to be inserted into rubber stoppers or tubing should have the sharp edges removed. They may be filed off, but it is usually more convenient to accomplish the same result by heating. Hold the tube to be fire-polished at an angle of 45° with the lower end just above the inner blue cone of the Bunsen flame. Whenever a glass tube is to be inserted into a rubber stopper, the glass and stopper should both be wet with water. Do not try to force a tube through a stopper, but use gentle pressure and a twisting motion.

6. Bending Glass Tubing. In order to bend glass tubing properly it is necessary that the tube be softened over a length of about 5 cm. This may be accomplished by making use of the *wing top* (fish tail) for the Bunsen burner. The tube is held lengthwise in the flame and rotated in order to heat it evenly. When the glass has become sufficiently softened, remove it from the flame and make the desired bend all at once. Do not try to continue the bending after the glass starts to cool.

7. The Wash Bottle. Fit up one of the larger flasks (250 or 500 cc.) in your outfit as a wash bottle, keeping in mind the points just outlined for working glass. The proper construction of a wash bottle is shown in Fig. 1. Have your wash bottle approved by the assistant. If distilled water is available, this should always be used in the wash bottle.

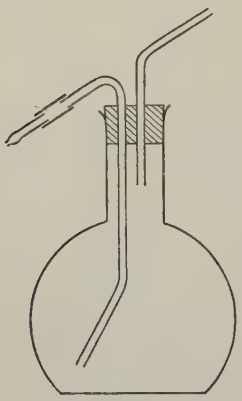

FIG. 1.

Prepare also several stirring rods 10–12 cm. in length. These are made by fire-polishing the ends of a glass rod of suitable length. One end of the rod is usually bent over to form a 45° angle for convenience in holding the rod, or in hanging it up.

8. Working Volume of Apparatus. It is desirable to know approximately the volume of liquid which your test tubes and smaller beakers will hold. By means of a graduate, determine the number of cubic centimeters of water required to half fill a test tube of the standard size. (It is not good practice to heat a test tube which is much more than half full.) Put what you *estimate* to be 10 cc. of water into a test tube. Measure this water to determine the accuracy of your guess. Practice until you can closely estimate 5, 10, and 15 cc. of water. Similarly, fill one of the smaller beakers two-thirds full of water, estimate the number of cubic centimeters, and check your estimate. Practice until you can estimate volumes of 50 and 100 cc. quite closely.

9. Decantation. To a test tube partly filled with water add a little fine sand, and shake. Then allow the suspended matter to settle and pour off as much as possible of the water without disturbing the sediment. This operation is known as *decantation.* By repeatedly adding fresh water and decanting, a precipitate which is slimy and would not filter well may easily be washed free of soluble materials.

10. Precipitation and Filtration. Dilute 5 cc. of lead acetate solution to a volume of 15 cc. Add a few drops of dilute sulfuric acid. Observe the prompt separation of a solid — the *precipitate* — when the acid is added. Filtration is usually employed to separate a precipitate from the solution in which it formed. Fold a filter paper across a diameter and again at right angles. Separate

the folds so that you have three thicknesses of paper on one side and one on the other. The paper will form a cone which should fit snugly into the funnel. Holding the paper in place in the funnel, moisten the filter and press down the edges until the paper adheres closely to the glass. Support the funnel in a filter stand and place a dish beneath it. Fig. 2 shows a correct and an incorrect arrangement of apparatus for filtration. Much time can be saved by using a well-prepared filter. Decant most of the liquid, from which the lead sulfate has now settled, into the filter without disturbing the residue. Catch the *filtrate* in a beaker and add more sulfuric acid. If a precipitate still forms, it shows that the original precipitation was not complete. It is usually necessary to make such a test in order to determine whether you have completed the reaction which you desired to carry out. Finally, pour all of the precipitated lead sulfate on to the filter and use your wash bottle to wash out any particles which may stick to the side of the test tube.

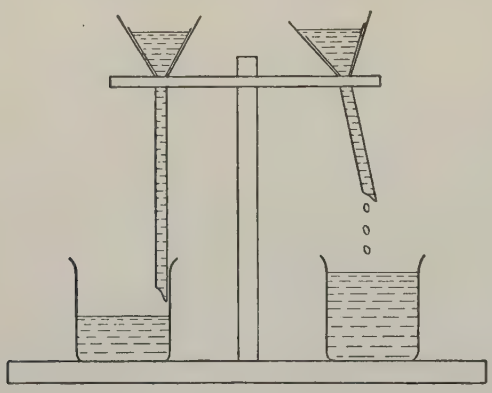

FIG. 2.

11. Crystallization. In separating mixtures of solids, advantage is often taken of the difference in solubility of the two (or more) components of the mixture in a given solvent. Prepare an intimate mixture of 15 g. of copper sulfate, 5 g. of sugar, and a little manganese dioxide, by grinding the solids in a mortar. Place this mixture in a porcelain dish, add 25 cc. of water and warm gently and stir until all of the soluble material seems to have dissolved and the solution boils. Pour the hot solution through a filter, catching the filtrate in a small beaker. Which component was removed by filtration? Cool the filtrate by setting the beaker in a dish of cold water and after crystals form decant the liquid from them. What is the material which *crystallizes* from the solution? What substances remain in the solution from which these crystals separated? In a case such as this, when two substances are soluble, it is always

the least soluble of the two which first separates. By using the proper quantity of solvent these first crystals may be obtained in a practically pure form.

12. Physical Change. Prepare a little mercuric iodide by adding 10 cc. of mercuric chloride solution to 2 cc. of a solution of potassium iodide. Filter the precipitate, and transfer some of it to a porcelain dish. Heat the dish with a very low flame, noting the color change which the salt undergoes after it dries. Let the dish cool and scratch the yellow residue with a file or splint. What happens? Record all the changes which you observe during this experiment. Was the composition of the precipitate changed during the heating? Are the color changes which you observe physical or chemical phenomena?

13. Sublimation. Place one or two small crystals of iodine in a dry test tube. Hold the tube in an inclined position and heat the bottom very gently with a small flame. What is the purple vapor? What is the film of solid which collects on the upper (cool) portion of the test tube? Note that the iodine, if gently heated, does not melt but passes directly into the vapor phase. This is known as *sublimation.* Is it a physical or a chemical change?

14. Chemical Change. Place a small piece of copper scrap in a test tube and add 5 cc. of concentrated nitric acid. (Hood.) Record all the changes which you can observe taking place. After all the copper has disappeared, pour the solution into a dish and carefully evaporate it to dryness. Describe the appearance of the residue. Does it resemble the original copper? Does it contain any copper? Has a physical or a chemical change taken place?

15. Heating Ammonium Chloride. Place 2 g. of ammonium chloride in a dry test tube. Heat the tube, gently at first, until all the solid disappears from the bottom of the tube and collects on the upper, cooler portion. In order to determine whether this substance is the same compound with which you started, allow the test tube to cool and dissolve the solid by adding about 2 cc. of water. Divide the solution into two parts. To one part add an equal volume of sodium hydroxide solution, warm, and smell the escaping vapors. What odor do you recognize? This is a test for the ammonium radical (NH_4). To the other part of the solution add a drop of silver nitrate solution. The white precipitate is a test for the chloride radical. What was the composition of the

Cu S
wt of crucible
wt of " + Cu
wt " Cu

weigh in container only
clean copper wire
wt of copper sulfide
wt of S

vaporized solid? From this evidence, would you consider the change which occurred when you heated ammonium chloride to be physical or chemical?

In a clean test tube place a fresh supply of ammonium chloride. Support the tube in a nearly horizontal position and across the mouth of the tube secure a strip of *wet* red litmus paper. Heat the test tube strongly, watching the litmus paper carefully. (See that the litmus does not dry out during the heating.) Two changes of color of the litmus paper can be observed if the heating is carefully done. Write an equation representing the heating of ammonium chloride and explain why the litmus should change color. Does the heat decomposition of ammonium chloride actually involve a physical or a chemical change?

16. Effect of Heating a Hydrated Salt. Place a few crystals of copper sulfate in a dry test tube. Gently heat the crystals for some time, keeping the test tube slightly inclined mouth downward. What is the substance which collects on the inside of the tube? Allow the tube to cool, and when quite cold, add a few drops of water to the solid left in the tube. Feel of the test tube after the water has come in contact with the solid. Note and record any other evidence of reaction. Write equations for the reactions which took place, and state whether they are physical or chemical in nature.

17. Water an Aid to Chemical Reaction. In a *dry* mortar, grind together 2 g. of sodium bicarbonate with an equal weight of "cream of tartar"— $KHC_4H_4O_6$ — or tartaric acid. Is there any evidence of reaction between the dry solids? Put this mixture into a beaker of water. Do they react now? Many substances which do not react when dry will readily react when their solutions are mixed. Refer to VII for an explanation of this fact.

18. Catalysis. Heat a little potassium chlorate in a test tube until it just melts. Sprinkle a pinch of manganese dioxide upon the melted chlorate. What effect has it? Does the manganese dioxide appear to undergo any change?

19. Quantitative Aspect of Chemical Change. Law of Constant Composition. Roll up a suitable length of very fine copper wire (about 1. g.) and weigh it to the nearest centigram. Record the weight of wire taken, place it in a weighed porcelain crucible, and heat strongly for 15 minutes. Allow the crucible to cool slowly at first by turning down the flame; finally remove the

flame and let the crucible cool to room temperature. Weigh the product and note the increase in weight. Repeat the experiment with a second weighed portion of wire, and again record the increase in weight. Calculate the weight of oxygen which, according to your data, will combine with exactly one gram of copper. This value should be the same in both cases. (**7**.)

QUESTIONS.

1. What is meant by the following terms: decantation; filtration; precipitate; filtrate; crystallization?
2. How may an insoluble substance be separated from material in solution, and how may it be freed from soluble substances held mechanically?
3. How may a soluble solid be separated from a mixture with an insoluble solid?
4. How may you determine whether an observed change in matter is of a physical or chemical nature?
5. What is meant by sublimation? Mention an example which involves a physical change only, and one which involves also a chemical change.
6. What is meant by catalysis?
7. Mention two characteristics of chemical changes illustrated in experiment 19 of this exercise.
8. Refer to Fig. 2, and list all the faults you can point out with the incorrectly arranged apparatus for filtration.
9. Mention three evidences of chemical change observed in the reaction of copper with nitric acid.
10. What per cent of copper is present in copper oxide prepared by heating the hydroxide? by burning the sulfide?

Crue – 18.1089 gr
Ball 19.0051 gr.

EXERCISE II.

PERCENTAGE COMPOSITION. COMBINING WEIGHTS.

MATERIALS: Alcohol, barium chloride, copper sulfate, granulated lead, tin, zinc (sheet).

SPECIAL APPARATUS: Horn pan balance and weights.

1. Per Cent of Water in a Hydrate. Weigh a small porcelain crucible and record the weight to the nearest centigram. Place in the crucible about ½ g. of crystallized barium chloride, recording the exact weight of the salt. Place the crucible on a pipestem triangle and heat, gently at first, and after a few minutes increase the heat until the bottom of the crucible is dull red. After about five minutes allow the crucible to cool, and when quite cold, weigh it. Repeat the heating and weighing until there is no further loss in weight of the crucible and its contents. Record this final weight and from your data calculate the per cent of water contained in this hydrate. Calculate also the number of moles of water in one mole of the hydrate.

2. Combining Weight of Tin. Read pp. 7, 8 of your text. Clean and dry (by gentle heating) a small porcelain dish. Allow it to cool and then weigh the dish as accurately as possible. Place in the dish about 1 g. of pure tin and weigh again as closely as possible. Add 10 cc. of water and 10 cc. of concentrated nitric acid. (Hood.) Cover the dish with a watch glass and warm very gently to cause the reaction to start. Allow the reaction to proceed, warming occasionally, and adding a little more nitric acid if necessary, until all the tin has disappeared and a white solid remains. Remove the watch glass, and by means of a jet from the wash bottle wash back into the evaporating dish any particles of solid which may have spattered up on to the glass. Place the dish on the steam bath and allow the solution to evaporate until all visible liquid is gone. Then heat the dish over a small Bunsen flame to remove the last traces of moisture. Cool, weigh the dish and residue, and again heat for a few minutes. There should be no loss of weight during this second heating, but if there is, the heating must be repeated until a constant weight is obtained.

The changes which take place during this experiment result, indirectly, in the conversion of tin into tin dioxide.

$$4\ HNO_3 + Sn \longrightarrow H_2SnO_3 \downarrow + 4\ NO_2 + H_2O$$
$$H_2SnO_3 \text{ heated} \longrightarrow SnO_2 + H_2O \uparrow .$$

Arrange your data in the following form:

Wt. of dish + tin	——
Wt. of dish	——
Wt. of tin	——
Wt. of dish + residue	——
Wt. of dish + tin	——
Gain in weight	——

From your data, calculate the combining weight of tin.

3. Combining Weight of Chlorine. In order to obtain the combining weight of an element, it is not necessary to cause it to combine directly with oxygen. If the combining weight of some other element is known, then this element may be allowed to react with the element whose combining weight is being determined. This method may be used for finding the combining weight of chlorine.

Weigh a clean dry porcelain dish, as in the previous experiment, and weigh into it about 2 g. of granulated lead, recording all your weights as before. Add 10 cc. of water and about 5 cc. of concentrated nitric acid. (Hood.) Cover the dish with a watch glass and warm gently until all the lead dissolves. (More nitric acid may be added if required.) When the reaction is at an end, remove the watch glass and, by means of a jet from the wash bottle, wash back into the dish any liquid which may have spattered on to the cover glass. To the solution add concentrated hydrochloric acid drop by drop until precipitation seems to be complete, and evaporate the solution carefully — in the hood — until nearly all the liquid is gone. During the evaporation, a very small flame should be used, and the burner should be held in the hand and moved back and forth under the dish, taking great care to avoid loss by spattering. When most of the solution is gone, add a few drops of concentrated hydrochloric acid and continue to evaporate until the residue appears dry, but do not heat very hot. Cool the dish, weigh it accurately, and repeat the heating and weighing until a constant weight is obtained.

Evaporating dish + [illegible]		47,4649
" " "	4 pk	48,4840.-
"		
1st weighting	—	50,4100
2nd "	—	48,6000

During this experiment the reactions taking place result in the conversion of lead into lead chloride.

$$3\ Pb + 8\ HNO_3 \longrightarrow Pb(NO_3)_2 + 2\ NO + 4\ H_2O.$$
$$Pb(NO_3)_2 + 2\ HCl \longrightarrow PbCl_2 \downarrow + 2\ HNO_3.$$

The combining weight of lead is 103.6. Calculate from your data the combining weight of chlorine.

4. Combining Weight of Copper. Recall that the combining weight of an element is that weight of the element which will combine with *or displace* 8 g. of oxygen or its equivalent.

Weigh roughly 6–8 g. of copper sulfate, pulverize it in a mortar, and dissolve the salt in about 100 cc. of water. Weigh accurately a piece of bright sheet zinc (do not take more than a gram of zinc), and drop the zinc into the copper sulfate solution. Let it stand with occasional shaking until all of the zinc has dissolved. Filter the solution and by means of the wash bottle transfer all of the displaced copper on to the filter paper; wash until all of the excess copper sulfate has been removed. In washing a precipitate, the jet should be directed around the upper edge of the filter paper. Use only a little water at a time and let it all run through the filter before adding more. If alcohol is available, after washing with water pour 10 cc. of alcohol over the filter paper. Carefully remove the filter paper, open it, and spread it on a watch glass. Set the watch glass over an empty evaporating dish and heat the dish with a very low flame until the paper and precipitate are quite dry (at least one-half hour). Weigh the precipitated copper on the filter paper, using another piece of filter paper of the same size as a counterpoise on the other pan of the balance.

When the zinc dissolved, it displaced an equivalent weight of copper from the copper sulfate solution. (An excess of copper sulfate was used.)

$$Zn + Cu^{++} \longrightarrow Cu + Zn^{++}.$$

The combining weight of zinc is 32.7. Calculate the combining weight of copper from the data which you obtained in this experiment. Calculate your per cent error.

QUESTIONS.

1. Is the amount of water present in a hydrate in accord with the law of definite composition?
2. What are some of the sources of error in the determination of the per cent of water in crystallized barium chloride?

3. Define combining weight in terms of oxygen.
4. Define combining weight in terms of displacement.
5. What relation exists between the atomic and equivalent weights of elements?
6. What sources of error might cause your value for the combining weight of tin to be high? to be low?
7. What error could result from heating the displaced copper of expt. 4 too strongly when drying it?
8. If 1 g. of copper displaces 3.393 g. of silver, what is the combining weight of silver?
9. The per cent of sulfur in lead sulfide is 13.1. Calculate the combining weight of sulfur in the compound.
10. Is it possible for sulfur to have more than one combining weight? Explain.

EXERCISE III.

OXYGEN. DIRECT UNION. BASIC OXIDES.

MATERIALS: Barium peroxide, calcium, calcium oxide, cupric oxide, lead dioxide, lead monoxide, lead oxide (red), magnesium ribbon, manganese dioxide, mercuric oxide, picture wire, potassium chlorate, silicon dioxide, sodium wire, stannous oxide, sulfur, zinc oxide.

SPECIAL APPARATUS: Pinch cock. Pyrex test tube.

1. Sources of Oxygen. Prepare a number of glass tubes about 12 cm. long, and closed at one end. Such tubes are most easily made by taking a piece of tubing twice the length of the desired tube and heating this at its middle point in a hot Bunsen flame, revolving it slowly while heating. When the tube softens, remove it from the flame and pull it apart. The fine capillary may be broken off and the end sealed by heating for a moment. Such tubes are called *ignition tubes.*

In such an ignition tube place red oxide of mercury to a depth of one centimeter. Heat the tube for some time in the hottest part of the Bunsen flame. Describe all the changes which take place. While still heating, insert a spark on the end of a splint into the open end of the tube. What does the result indicate? What substance remains in the tube after heating? Give reasons why mercuric oxide is not suitable for use in the preparation of oxygen in quantity.

Similarly, in clean ignition tubes heat small quantities of cupric oxide, manganese dioxide, lead dioxide, barium peroxide, red lead, and silicon dioxide. Determine in each case whether or not any oxygen is given off. Write an equation for the reaction in each case where oxygen is obtained.

2. Laboratory Preparation of Oxygen. Weigh approximately 10 g. of potassium chlorate and 5 g. of manganese dioxide. Grind the two materials together in a mortar and transfer the mixture to a dry test tube. Support the tube in a mortar and transfer the mixture to a dry test tube. Support the tube in a clamp on the lamp stand, tilting the test tube so that the open end is slightly

lower than the other end (Fig. 3). Why should the tube be placed in this position? Provide the test tube with a rubber stopper carrying a glass delivery tube. Connect the delivery tube by a short piece of rubber tubing to a longer glass tube arranged to lead the gas under the shelf of the water pan. Fill several bottles with water and invert them in the water pan, placing one of them over the hole in the shelf of the pan. Heat the contents of the tube slowly and steadily, holding the burner in the hand and moving

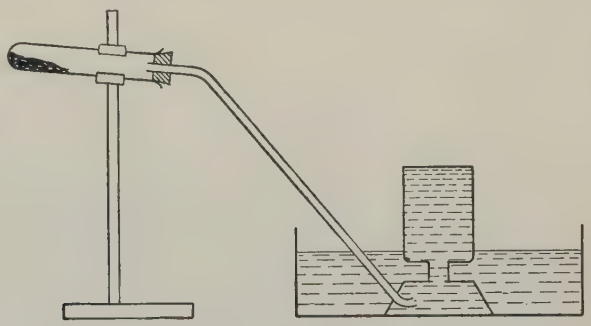

FIG. 3.

it back and forth in order to heat the whole mixture uniformly. Do not allow the hot potassium chlorate to come in contact with the stopper. Fill several bottles with oxygen without interrupting the heating, and then disconnect the delivery tube to avoid sucking up water into the hot test tube as it cools.

3. Reaction of Metals with Oxygen. Slip a glass plate under the mouth of one of the bottles of oxygen, remove it from the pan, and set it upright on the desk. Obtain from the assistant a piece of sodium wire about 2 cm. long. *Caution:* Do not handle sodium with moist fingers or place it in wet apparatus. Place this wire in the bowl of the iron spoon and heat it until the sodium melts and takes fire. Lower the burning sodium into a bottle of oxygen and let it completely burn up. When it no longer burns, plunge the spoon and its contents into a bottle of water. Feel of the resulting solution and try its effect on litmus. The black particles are an oxide of iron which flaked off from the spoon. Sodium peroxide is formed when sodium burns in oxygen. Write equations representing the formation of this oxide and its reaction with water.

Heat the end of a piece of picture wire (or steel wool) and dip it in a little sulfur. Holding the wire in the tongs, ignite the sulfur

and promptly lower the wire into a jar of oxygen. The oxide formed in this case is Fe_3O_4. Half an inch of water in the bottle during this reaction helps to prevent the breaking of the bottle. For what is the sulfur used?

In a third bottle of oxygen try burning a small piece of calcium or magnesium. Result? Does the union of metals with oxygen appear to be a general reaction?

Basic Oxides.

4. Basic Oxides with Water. The oxides of metals, such as those formed in section (3), are called *basic oxides*. In what way does the sodium peroxide, which you prepared in expt. 3, react with water?

In an evaporating dish moisten a lump of calcium oxide with 2 or 3 cc. of water. After a few minutes see if you can observe any evidence of reaction. Test the product with moist litmus paper. What has been formed?

Burn a strip of magnesium ribbon, allowing the ash to fall on a filter paper. Moisten the ash with a drop of water and place a wet litmus strip in contact with this ash for some time. Notice that the litmus changes color much more slowly than in the case of calcium oxide with water. One reason for this is that the product formed is not very soluble in water.

Shake half a gram of powdered cupric oxide with 10 cc. of water for some time. Filter, and try the action of the filtrate on litmus. Explain.

5. Basic Oxides with Acids. Although several of the basic oxides react directly with water to form bases, many of them do not show this reaction to an appreciable extent because they are so insoluble. These oxides do, however, react with acids, and this reaction is a second important characteristic of this class of oxides.

Place about half a gram of cupric oxide in a test tube, add 10 cc. of dilute sulfuric acid, and boil gently for several minutes. Filter in order to remove the undissolved residue, catch the filtrate in a porcelain dish, and evaporate to dryness. Avoid overheating the solid residue, for it is decomposed by heat. The copper oxide reacted with the acid to form water (not noticed in this experiment) and a salt — the residue in the dish.

In a similar manner try the reaction of small amounts of cupric oxide with dilute nitric and hydrochloric acids, separately. In

each case filter to remove any undissolved oxide and evaporate the filtrate to dryness in a clean dish to isolate the salt. What point of similarity is there between the three salts just formed? Why should there be any similarity?

6. Generality of the Preceding Reaction. In the preceding section it was shown that cupric oxide reacts with three different acids. In order to show that this is a general reaction, the behavior of other metal oxides with acids will be examined.

Try the reaction of small amounts of zinc oxide with sulfuric acid, and of calcium oxide with nitric acid. Filter out any undissolved oxide and demonstrate that a salt was a product of each reaction.

To half a test tube of dilute hydrochloric acid add lead oxide in small amounts and boil gently until no more of the oxide will dissolve. Filter the hot solution promptly, catch the filtrate in a test tube, and cool it under the tap. What is the product which crystallizes? Represent by equations all the reactions which you carried out in sections (5) and (6).

7. Oxidation of a Low-valence Oxide. Certain oxides of elements in low valence will react with oxygen to yield an oxide containing the element in higher valence. Spread about a gram of stannous oxide on a porcelain plate, *e.g.*, a crucible cover, and heat it strongly for some time, noting the change which takes place. What is the composition of the final residue?

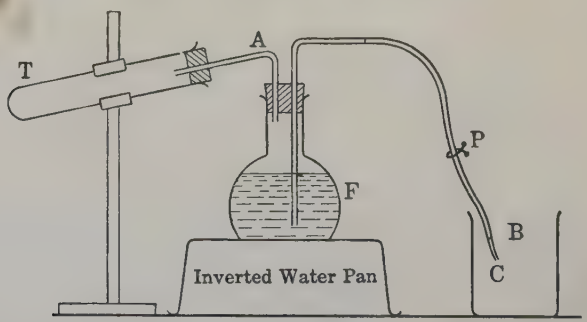

FIG. 4.

8. Weight of a Liter of Oxygen. Construct the apparatus shown in Fig. 4, taking particular care to secure gas-tight connections. Before starting the actual experiment read the entire directions and make sure that you understand how the apparatus

is intended to operate. The flask, *F*, should have a volume of one liter, and the receiving beaker, *B*, should be of at least 800 cc. capacity.

Heat about half a gram of manganese dioxide in a crucible to dry it thoroughly. Mix the dried dioxide with about 5 g. of *dry* potassium chlorate. Place the manganese dioxide-chlorate mixture in a 60 cc. pyrex test tube, *T*, and weigh the tube and its contents accurately. Record all data in orderly form.

Fill the siphon tube completely with water by opening the pinch cock, *P*, and blowing through the tube, *A*. Close the pinch cock and connect the test tube as shown in the figure. With the jet tube, *C*, dipped into a beaker of water, raise the beaker until the level of water in the beaker is the same as in the flask, *F*, then open the pinch cock for a few minutes to allow the pressures to become equal. Close the pinch cock again and let the jet tube dip into a clean, dry beaker, *B*, which has been weighed on the platform balance.

Open the pinch cock. A little water will flow out (why?), but if your connections are tight, the flow will soon stop. If water continues to drip, there is a leaky connection which must be repaired before going on with the experiment.

Keeping the pinch cock open, start heating the mixture in the test tube with a low flame, catching all of the displaced water in the receiving beaker. Endeavor to keep a steady, slow evolution of gas. If it becomes necessary to interrupt the heating, be sure to leave the pinch cock open, and the jet tube dipping under the water in the beaker. When 600–700 cc. of water has been collected, stop heating, and with the jet tube under water let the hot test tube cool to room temperature. Raise the beaker until the level of the water is the same as that in the flask, — to again equalize the pressures, — then close the pinch cock, take the jet out of the beaker, and weigh the beaker and water on the platform balance. Weigh test tube and residue on the accurate balance. The loss in weight of the test tube is, obviously, the weight of oxygen evolved. Since one cubic centimeter of water weighs very nearly one gram, the weight of water collected gives a sufficiently accurate measure of the volume (uncorrected) of oxygen liberated.

Record the barometer reading and the temperature of the room. Correct the volume of oxygen to standard conditions, making allowance for the vapor pressure of water. See p. 62, and

Appendix II. From your data calculate the weight of one liter of oxygen.

9. Ozone. If an ozonizer is available, note the pungent odor of the air near it. Expose a moist strip of starch-iodide paper near the machine for a few minutes. Account for the color which develops. (**35.**)

QUESTIONS.

1. Do all oxides evolve oxygen when they are heated to the temperature of the Bunsen burner? What would be the effect of higher temperatures?
2. What is the purpose of the manganese dioxide used in the laboratory preparation of oxygen?
3. Calculate the weight of potassium chlorate required to yield 500 cc. (standard conditions) of oxygen.
4. Calculate the weight of potassium chloride formed during the evolution of 500 cc. of oxygen from potassium chlorate.
5. What is meant by a metal, a basic oxide, a base?
6. What reaction is characteristic of basic oxides? What additional reaction is shown by the more active basic oxides?
7. Illustrate by equations the formation of the oxides of several common metals by a direct union reaction.
8. Mention sources of error in your determination of the weight of a liter of oxygen.
9. Calculate the true weight of a liter of oxygen under standard conditions, and determine your per cent error in this experiment.
10. Why does ozone produce a blue coloration with starch-iodide mixture?

EXERCISE IV.

ACIDIC OXIDES.

MATERIALS: Barium hydroxide, calcium hydroxide, charcoal, copper scrap, glass wool, limestone, manganese dioxide, oxygen cylinder, phosphoric acid, phosphorus (red), potassium chlorate, sand, sodium bicarbonate, sodium dichromate, sodium sulfite, sulfur, sulfur dioxide cylinder. *Solutions:* barium hydroxide, calcium hydroxide.

SPECIAL APPARATUS: "Contact Process" apparatus, Kipp generator (for carbon dioxide), pyrex test tube.

PREPARATION OF ACIDIC OXIDES.

1. By Direct Union. Collect several small bottles of oxygen according to the directions in III, 2. (Much time may be saved if a cylinder of the gas is available from which the necessary supply may be drawn.) Place a small amount of red phosphorus in an iron spoon, ignite the phosphorus and lower it at once into a jar of oxygen. Note the intensity with which phosphorus burns, and the white cloud which forms. This consists of fine particles of solid phosphoric oxide (P_2O_5). Add a few cubic centimeters of water to the jar and shake until the white fumes disappear. Test the resulting solution with litmus. Compare the result with that obtained when sodium was burned in oxygen. (III, 3.)

In the same manner, try burning small pieces of sulfur and of carbon in bottles of oxygen. In each case, add water, shake, and determine whether or not the solution will affect litmus. Notice any difference in the rapidity with which litmus changes color, and the intensity of the color produced. Represent all reactions by equations.

2. By Heat Decomposition. Place 3–4 g. of sodium hydrogen carbonate in a test tube provided with a rubber stopper and delivery tube. Heat the test tube with a low flame, allowing the evolved gas to bubble through 10 cc. of water in a test tube. When no more gas is evolved, test this solution with litmus. What products are formed by the decomposition of sodium hydrogen carbonate? Save the residue in the test tube for use in (3).

Pulverize a little limestone, place it in a pyrex test tube and heat as strongly as possible in a good Bunsen or blast lamp flame. Conduct the evolved gas through 5 cc. of limewater. Is there any evidence that carbon dioxide is produced in this experiment?

Place 2–3 cc. of concentrated sulfuric acid in a porcelain dish, support this on a lamp stand in the hood, and heat strongly. Notice the dense white fumes evolved. With the tongs hold a piece of moist blue litmus paper in these fumes. At high temperatures, sulfuric acid is largely decomposed into sulfur trioxide and water. *Caution:* Allow this dish to cool to room temperature before adding water or attempting to dispose of the remaining acid.

Similarly, heat 2 cc. of phosphoric acid in a porcelain dish and by means of a litmus test determine whether this acid is similarly decomposed by heat.

3. By the Action of an Acid on a Salt. To the residue obtained by heating sodium hydrogen carbonate in section (2), add a few cubic centimeters of a dilute acid. What causes the effervescence? What do you conclude to be the stability of normal sodium carbonate toward heat?

In a test tube acidify a pinch of sodium sulfite with dilute sulfuric acid. Smell cautiously of the gas and determine its effect on moist litmus paper.

4. By the Reduction of an Acid. Place some copper scrap in a pyrex test tube, add 5 cc. of concentrated sulfuric acid and heat to boiling. (Hood.) Cautiously smell the gas evolved, and note any other evidence of reaction. *Do not put your face over the test tube in order to smell the gas.* Sulfuric acid is reduced by copper to sulfurous acid which is unstable (section 3). This reaction is not of general application for the preparation of acidic oxides.

5. By the Oxidation of a Low-valence Oxide. At moderate temperatures, by the help of a catalyst, sulfur dioxide may be made to unite with oxygen to form sulfur trioxide. This reaction is the basis of the contact process for sulfuric acid. Ask the instructor to set in operation a laboratory " contact plant." Refer to the diagram on p. 179 of the text. Oxygen and sulfur dioxide are led through sulfuric acid to dry them, and then passed over heated platinized asbestos. Collect a very little of the product in a dry test tube, take it to the hood, and, with the test tube pointing away from you, add 10 cc. of water. Note the hissing and sputtering when the water is added. Test the solution with litmus.

6. Preparation of Chromic Anhydride by Dehydration.[1] This method of obtaining an acid oxide is very similar to the method by which sulfur dioxide and carbon dioxide were prepared in (3). Dichromic acid is set free, and its decomposition is aided by the dehydrating action of concentrated sulfuric acid.

$$Na_2Cr_2O_7 + 2\ H_2SO_4 \longrightarrow 2\ NaHSO_4 + H_2Cr_2O_7.$$
$$H_2Cr_2O_7 \longrightarrow H_2O + 2\ CrO_3 \downarrow.$$

Grind 3 g. of sodium dichromate to a fine powder and dissolve it in a test tube in 5 cc. of boiling water. Cool the tube under the tap, allow any sediment to settle, and decant the clear solution into a small flask. To this add *slowly*, with shaking, 10 cc. of concentrated sulfuric acid. Again cool the flask under the tap. Chromic anhydride separates as a red crystalline solid. Filter the solid, using in the funnel a plug of glass wool instead of filter paper. Wash the crystals with 5 cc. of concentrated nitric acid and let them drain.

Reactions of Acidic Oxides.

7. With Water. In several of the preceding sections you have treated an acid oxide with water and tested the product with litmus. What was formed in each case? This reaction with water is characteristic of acid oxides provided the acid formed is soluble. (Compare basic oxides.)

Shake a gram of sand (silicon dioxide) with water, decant the liquid, and test with litmus. Why is no reaction obtained?

8. With Bases. Blow through 5 cc. of barium hydroxide solution. What acid oxide is contained in the breath? What is the white precipitate formed in the solution?

Pulverize a small lump of barium hydroxide. Place this in a dry test tube and drop into the tube a little of the chromic anhydride prepared in (6). Is there any evidence of reaction? Add 10 cc. of water and heat nearly to boiling. Barium hydroxide is very soluble in hot water. What is the yellow, insoluble residue? Represent this reaction by an equation. Compare the products of such a reaction with those which would be obtained if barium oxide (a basic oxide) were allowed to react with chromic acid.

[1] Exercise XXXIV, The Preparation of Chromic Anhydride, should be substituted for this section if it is desired at some later time to perform Exercise XXXV, The Preparation of Ammonium Dichromate.

9. With Basic Oxides. In a crucible heat 2 g. of calcium hydroxide as hot as possible for ten minutes to convert the base into the oxide. Place the resulting powder in a dry test tube and provide the test tube with a one-hole rubber stopper carrying a delivery tube reaching to within an inch of the bottom of the tube. Connect the delivery tube to a carbon dioxide Kipp generator. (**162.**) Pass carbon dioxide into the tube for five seconds to displace the air, then stopper the tube, leaving the carbon dioxide turned on for several minutes. Shut off the generator, disconnect the tube, and acidify the contents with dilute hydrochloric acid. What does the effervescence indicate?

QUESTIONS.

1. What is meant by a non-metal; an acidic oxide; an acid?
2. What four methods of forming acidic oxides are represented in this exercise?
3. Compare the stability of the following acids toward heat: phosphoric; sulfuric; sulfurous; carbonic; dichromic.
4. What three reactions are characteristic of acidic oxides? Illustrate each of these by an equation.
5. Why was the chromic anhydride prepared in this exercise filtered on glass wool instead of on filter paper?
6. What weight of chromic anhydride can be obtained from 5 g. of sodium dichromate?
7. Why is not the preparation of sulfur dioxide from sodium sulfite an important commercial source of this substance?
8. What difference in physical properties do you notice between the elements whose oxides are basic and those whose oxides are acidic?
9. How do you explain the fact that carbon dioxide is evolved rapidly when hydrochloric acid is added to calcium carbonate at room temperature, but only slowly when calcium carbonate is heated?
10. Starting with 10 g. of calcium carbonate, calculate the weight of carbon dioxide which may be obtained from this salt, and the weight of barium carbonate formed when this carbon dioxide is passed into an excess of barium hydroxide solution.

EXERCISE V.

HYDROGEN. DISPLACEMENT.

MATERIALS: Aluminum, calcium, copper, copper oxide, ferrosilicon, iron, lead, magnesium, sodium amalgam (5%), sodium hydroxide, zinc dust, zinc (mossy). *Solutions:* Acetic acid (dilute), copper sulfate, mercuric chloride.

1. Metals with Acids. Activity. In separate test tubes place small pieces of magnesium, lead, zinc, iron, aluminum, and copper. To each metal add 10 cc. of dilute hydrochloric acid. Note which of the metals react, and arrange them so far as possible in order of decreasing activity as shown by the rate at which they react. Sometimes the surface of a metal is covered with a film of oxide which must dissolve before the metal itself can react. Therefore allow plenty of time before deciding that any of the above metals will not react. If a reaction is not obtained in the cold, heat the tube. Bring a lighted splint near the mouth of one of the test tubes from which a gas is being evolved rapidly. A slight explosion results; this is often used as a test for hydrogen.

2. Metals with Different Acids. In each of three test tubes place the same quantity of mossy zinc. To one tube add 10 cc. of dilute hydrochloric acid, to the second, 10 cc. of dilute sulfuric acid, and to the third, the same volume of dilute acetic acid. These acids are of about the same concentration, but you will notice a difference in the speed with which the zinc reacts with each. Hydrogen is displaced in each case.

Compare the rate at which zinc reacts with dilute and with concentrated sulfuric acid. Read p. 114 for an explanation of these phenomena.

To small pieces of zinc, iron, and copper, add 10 cc. of dilute nitric acid. Does this acid attack the metals? Recall that copper did not react at all with hydrochloric acid. Test the evolved gas with a lighted splint. Observe the color of the gas, and smell it very *cautiously*. Is the gas hydrogen? NO_2

3. Metals with Water. Drop a piece of calcium the size of a pea into 10 cc. of water. Collect a little of the gas by inverting a

test tube for a few minutes over the tube in which the reaction is proceeding. Test the gas with a lighted splint. What is it? Test the solution with litmus. What does it contain?

Obtain from the assistant a small quantity of 5% sodium amalgam (sodium dissolved in mercury). Drop this into half a test tube of water and test the gas evolved. The mercury is unchanged. It merely slows down the action of the sodium to a point of safety.

Warm a strip of aluminum with water. Does it react? Did you expect it to react? (Recall household uses for aluminum.) Pour off the water, cover the aluminum with a few cubic centimeters of mercuric chloride solution, and warm until the aluminum becomes coated with a film of mercury. Remove the metal, wash it, and now try boiling it with water, watching closely for any evidence of reaction. Mercury, in effect, cleans the surface of the aluminum, removing the film of oxide usually present and allowing water actually to come into contact with the metal. Many metals which apparently do not react with water will do so if amalgamated.

4. Metal with a Base. Heat together a mixture of 2 g. of solid sodium hydroxide with 3 g. of zinc dust. Test the escaping gas for hydrogen.

$$2\,NaOH + Zn \longrightarrow (NaO)_2Zn + H_2\uparrow.$$

This reaction is limited to a few of the more active metals.

5. Non-Metal with a Base. *Silicol process.* Warm a strong solution of sodium hydroxide (about 8 N) to about 90°. Drop into this solution a gram of ferrosilicon — an alloy of iron with a considerable amount of the non-metal silicon. Test the escaping gas for hydrogen. Represent this reaction (the iron takes no part) by an equation.

6. Laboratory Preparation of Hydrogen. Select a two-hole stopper to fit your largest bottle. Provide the bottle with a thistle tube — which must reach very nearly to the bottom of the bottle — and pass a right angle glass bend through the other hole. Connect a rubber tube to this delivery tube and arrange to collect a gas over water. Cover the bottom of the generator with mossy zinc to a depth of about 3 cm. Insert the stopper tightly, and add through the thistle tube enough water to cover the zinc. Add also 5 cc. of copper sulfate solution, which aids in this reaction. Pour in concentrated sulfuric acid, a little at a time, until a fairly rapid evolution of hydrogen is obtained. More acid may be

added from time to time as required. Collect several bottles of hydrogen by displacement of water. Keep the generator in continuous operation until after experiment (9). All flames must be kept away from the delivery tube while hydrogen is being evolved.

7. Lightness of Hydrogen. Pour a bottle of hydrogen *upward* into another bottle. Immediately after pouring test both bottles by bringing a light to the mouth of each. Result?

8. Combustion of Hydrogen. Attach a jet delivery tube to the hydrogen generator; wrap a towel firmly around the generator as a precaution in case of explosion. *Have the assistant test the evolved hydrogen and give you permission to light the gas.* When permission has been obtained, light the jet and bring the burning jet into a dry test tube. Explain the deposit on the walls of the tube. What does the name " hydrogen " mean?

9. Reducing Action of Hydrogen. Place 0.5 g. of copper oxide in a hard-glass test tube. Support the tube horizontally, and shake it gently until the copper oxide is spread out in a rather thin layer. Provide the hydrogen generator with a glass delivery tube long enough to reach to the bottom of the test tube. Do not let the delivery tube come in contact with the copper oxide. See that a good stream of hydrogen is issuing from the generator, let it pass into the cold tube for a few minutes to displace the air, and then heat the test tube containing the copper oxide rather strongly with the Bunsen burner. Allow the reaction to continue for five minutes or longer, noting any evidence of reaction. Express the change by an equation. If possible, during the reduction, avoid igniting the hydrogen as it issues from the mouth of the test tube.

10. Zinc Sulfate. When the preceding experiments have been completed, dismantle the generator, but let the zinc, and the acid solution, remain in the bottle. Set this aside until the next exercise. If a solid separates by that time, add sufficient water to dissolve it, and filter the solution to remove undissolved particles of zinc or other impurities. Evaporate the solution to one-third its volume and set it aside to permit the dissolved salt to crystallize. This solid is zinc sulfate. Zinc is said to " dissolve " in sulfuric acid, but note that *unchanged* zinc is not obtained when such a solution is evaporated. There is a distinct difference between truly dissolving a substance, and dissolving it by means of a chemical reaction.

QUESTIONS.

1. Which of the common metals displace hydrogen from water?
2. Which of the common metals displace hydrogen from acids?
3. From what common acids do metals displace hydrogen? From what common acid is hydrogen not obtained by displacement with a metal?
4. What difference do you note in the action of an inactive metal with hydrochloric and with nitric acids?
5. Under what conditions is the silicol process suitable for the preparation of hydrogen?
6. Are any of the processes illustrated in this exercise suitable for the preparation of hydrogen on a commercial scale? Give reasons for your answer.
7. What are the best commercial sources of hydrogen?
8. What product is formed during the combustion of hydrogen? How may this compound be decomposed?
9. Mention substances with which hydrogen reacts and represent the reactions by equations.
10. When hydrogen is displaced from sulfuric acid by the action of zinc, is the hydrogen oxidized or reduced? Write an oxidation-reduction equation for this reaction.

EXERCISE VI.

PROPERTIES OF SOLUTIONS.

MATERIALS: Alcohol, calcium carbonate, calcium sulfate, carbon disulfide, carbon tetrachloride, copper sulfate, ether, glass (powdered), iodine, lard, rosin, sodium acetate, sugar. *Solutions:* barium chloride, chlorine water, lead acetate, phenolphthalein, potassium iodide, potassium permanganate.

SPECIAL APPARATUS: Condenser, pyrex distilling flask (100 cc.), pyrex test tube (60 cc.), thermometer, tin electrodes.

1. Purification of Solvents. Distillation. Set up a distilling flask and condenser as illustrated on p. 93 of the text. In the flask place 100 cc. of water and add enough potassium permanganate solution to color the liquid distinctly. Distill a few cubic centimeters of this solution, catching the *distillate* in a clean flask. Observe the color of the distillate. Does it contain any potassium permanganate? no

Wash out the distilling flask and place in it some dilute ammonium hydroxide — 50 cc. of water to which has been added 10 cc. of the reagent ammonium hydroxide. Distill several cubic centimeters from this solution. Smell of the distillate; test it with litmus. Can water be freed from ammonia by distillation? yes

2. Effect of Conditions on the Rate of Solution. Select three small crystals of copper sulfate of about the same size. Pulverize one of them. Drop one of these crystals into a test tube of water. Suspend the second by a loop of copper wire just under the surface of water in a second test tube. Place the pulverized material in a third test tube of water. Let these tubes stand until the end of the exercise, then examine them and compare the rates at which the three samples have dissolved. In which case did solution take place most rapidly? least rapidly?

Many substances commonly said to be insoluble are really measurably soluble if a large surface is exposed to the action of the solvent by having the solid in a finely powdered form. Test the solubility of glass in water by shaking some finely ground glass with a little pure water to which has been added a drop or two of phenolphthalein solution (an *indicator* which turns pink in the

glass wool-

presence of bases). The water dissolves a base from the glass; yet water containing phenolphthalein does not change color when stored in glass bottles? Why?

3. Solubility Dependent upon Nature of Solvent. In separate test tubes take a 10 cc. portion of water and of alcohol. To each solvent add a gram of sugar, and stir for a few moments. Result?

In the same way try the solubility of a small piece of rosin in alcohol and in water. What is the result this time? Pour the alcohol into an equal volume of water and note the milky *suspension* formed by the precipitation of the rosin. Observe that in a suspension the particles of suspended matter are visible. Can you see the dissolved particles in a sugar solution?

Try the action of water and of carbon tetrachloride on a small quantity of grease (lard, or any solid fat will do). What application do you make of this difference in solubility?

4. Solubility Affected by Nature of Solute. To 10 cc. of water add alcohol drop by drop until about 10 cc. has been added. Is alcohol soluble in water? To a fresh portion of water add carbon tetrachloride, a drop at a time, shaking after each addition, until you have added about 5 cc. of the solute. In the same way, test the solubility of ether, and of carbon disulfide, in water. Which of these substances would you consider very soluble in water? which slightly soluble? which insoluble?

Shake a gram of calcium sulfate with a test tube of water for several minutes, and filter the suspension carefully. To a few drops of the clear filtrate add barium chloride solution. Result? Evaporate the rest of the filtrate to dryness in a clean dish. Is there a residue? Would you conclude that calcium sulfate is at all soluble in water?

In the same way shake a gram of calcium carbonate with a test tube of water, filter, and evaporate the filtrate. Draw conclusions as to the relative solubilities of calcium carbonate and calcium sulfate in water. Remember that even a slight solubility is sometimes of great importance.

5. Effect of Temperature on Solubility of Solids. Precipitate a little lead chloride by adding a few drops of concentrated hydrochloric acid to 2 cc. of lead acetate solution. Add 10–15 cc. of water and heat nearly to boiling. If all of the solid does not dissolve, add a little more water. Cool the clear solution under the tap. How does the solubility of lead chloride change with temperature?

$Cl_2 H_{22}$ [illegible] [illegible]
" " " doesn't " [illegible]
C_2H_5-OH

— CCl_4 dissolves Vaseline

a precipitate formed

A similar effect may be shown with lead iodide, which crystallizes in glistening plates when a hot solution of this salt is cooled.

6. Effect of Temperature on Solubility of Gases. Clamp an inverted test tube full of tap water in a beaker of water. Heat the upper part of the tube with the Bunsen flame. What are the bubbles which form and collect at the top of the tube? If steam formed, what would become of it on cooling?

7. Supersaturation. Read p. 96 of the text. Place 5 g. of crystallized sodium acetate in a clean, dry test tube, taking care to get as little as possible of the salt on the sides of the tube. Add 2 cc. of water and heat the tube by dipping it in a beaker of boiling water until all the salt has dissolved. If you have taken more of the salt than will dissolve after continued heating, add water, two or three drops at a time, until it all goes into solution. Cover the test tube with a piece of filter paper and set it aside where it will remain undisturbed until quite cold (half an hour at least). Then drop a tiny crystal of sodium acetate into the solution and watch the result. Feel of the tube after the salt has crystallized.

8. Partition. Extraction. Shake a small crystal of iodine with about 15 cc. of warm water. Filter, so that none of the undissolved iodine can remain, and to the filtrate add 2 or 3 cc. (not more) of carbon disulfide, and shake. **Caution:** *Carbon disulfide is very inflammable. Do not bring the test tube near a flame.* Decant most of the water into another test tube and shake it with fresh carbon disulfide. Was there any iodine left in the water after its first contact with carbon disulfide? When a given substance is soluble in each of two immiscible liquids, what happens when its solution in the one is shaken with the other?

This process of extraction is frequently employed in testing for small amounts of substances present in a large volume of some liquid. To a test tube two-thirds full of water add two drops of potassium iodide solution and treat with 5 cc. of chlorine water. Can you observe any liberation of iodine? Now add 2 cc. of carbon disulfide and shake well. Result?

9. Lowering of the Vapor Pressure. Raoult's Law. The boiling point of a liquid is the temperature at which its vapor pressure just equals the pressure of the atmosphere. Consequently, if the addition of any substance lowers the vapor pressure of the liquid, the solution must be heated somewhat hotter before the

liquid boils. In other words, the rise in boiling point is a measure of the lowering of the vapor pressure.

Fill a 60 cc. pyrex test tube about half full of water and support the tube in a clamp on the lamp stand. Suspend a thermometer by a loop of wire so that the bulb is a little above the middle of the water in the test tube. Bend a piece of copper wire into a loop a little less in diameter than the test tube, and use this as a stirrer to insure even heating of the water in the test tube. With a very small flame boil the water and note the temperature at which it boils. The boiling point of pure water is 100°, but your thermometer is not accurate and may register several degrees above or below 100°. This makes no difference in the results of the experiments which follow.

When you have determined the boiling point of water on your thermometer, empty the test tube and place in it exactly 25 cc. (25 g.) of water and 17 g. of cane sugar. Heat this solution slowly with a small flame, stirring well, and observe the boiling point as accurately as possible. Your thermometer may easily be read to within one-half of one degree. Do not boil the solution long enough to drive off an appreciable amount of water. Now add just 17 g. more sugar to the solution in the test tube and again observe the boiling point. From the data calculate the approximate molecular elevation of the boiling point of water. The formula of cane sugar is $C_{12}H_{22}O_{11}$.

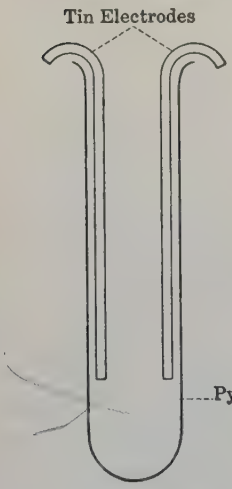

Fig. 5.

10. Non-Conductivity of Solutions of Non-Electrolytes. Assemble a conductivity cell as illustrated in Fig. 5. Be very sure that the test tube which you use for the cell is perfectly clean. In this cell place enough distilled water to cover the electrodes to a depth of at least 4 cm. Connect the electrodes with the terminals of the conductivity apparatus on the side tables. This is merely a source of direct current so arranged that a lamp bulb is in series with the cell. If any current passes through the cell, the bulb will light. Is pure water a conductor of the electric current?

Test the conductivity of water solutions of alcohol, and of sugar. Wash the cell and the electrodes thoroughly after each test. When you have finished with the electrodes, wash them and return them to the side table. Do not put the electrodes away in your locker.

QUESTIONS.

1. What method is usually employed for the purification of liquids?
2. From what kind of impurities may water be purified by this method?
3. Under what conditions does distillation fail to give a pure liquid?
4. Upon what does the rate of solution of a solid depend? Upon what factors does the solubility of a solid depend?
5. What conditions affect the solubility of gases? What is the effect of each?
6. What is meant by a saturated solution? a supersaturated solution?
7. Upon what principle does the extraction of a dissolved substance by the use of another solvent depend?
8. Explain why boiling-point elevation is dependent upon vapor pressure depression.
9. What regular boiling-point effect is noted in solutions of non-volatile substances whose solutions do not conduct the electric current?
10. What do you conclude is the unit particle of solute in such solutions?

EXERCISE VII.

EVIDENCE OF IONIZATION. PROPERTIES OF ELECTROLYTES.

MATERIALS: Copper (wire), cupric chloride, cupric oxide, iron wire, oxalic acid, sodium acetate, sodium bicarbonate. *Solutions:* Acetic acid (dilute), ammonium chloride, barium chloride, copper sulfate (1 N), ferric chloride, hydriodic acid, phenolphthalein, phosphoric acid in absolute alcohol, potassium chloride, potassium iodide, silver nitrate, sodium chloride, sodium sulfate, stannous chloride (1 N), zinc sulfate.

SPECIAL APPARATUS: Electrodes (copper and tin), generator for hydrogen sulfide, horn pan balance and weights, pyrex test tube (60 cc.), U-tube.

1. Conductivity of Solutions of Electrolytes. In section (10) of the preceding exercise you demonstrated that pure water, and water solutions of a certain class of substances, would not conduct the electric current. Assemble a conductivity cell as in Ex. VI. Using this cell, determine whether or not the following solutions will conduct the current. If the lamp in the circuit glows, the solution in the cell is a conductor. You can determine roughly how well each solution conducts the current by noting the brilliance with which the lamp glows. Wash the cell and electrodes thoroughly after each test, and do not allow the current to pass for longer than ten seconds.

(*a*) Dilute sulfuric acid solution.
(*b*) Dilute sodium hydroxide solution.
(*c*) Dilute hydrochloric acid solution.
(*d*) Dilute acetic acid solution.
(*e*) Dilute ammonium hydroxide solution.
(*f*) Potassium iodide solution.

Arrange these solutions in what you would consider to be the order of decreasing conductivity. What classes of compounds are included in the above list?

2. Properties of Ions. Prepare very dilute solutions of sulfuric, nitric, and hydrochloric acids by adding two or three drops of the dilute reagent to three-fourths of a test tube of water. Test each

solution with litmus. Taste the solutions. Account for the fact that these three different acids have the same effect on litmus, and the same taste. Why does lemon juice taste sour?

Rub a few drops of sodium hydroxide and of ammonium hydroxide between the fingers. The slippery feeling is characteristic of bases. Test these solutions with litmus. Why should solutions of bases possess certain similar properties? Why does soap feel "soapy"? If in doubt as to the answer, test some soap solution with litmus.

Many ions possess a distinctive color. Prepare dilute solution of copper sulfate, copper nitrate, and copper chloride by warming a pinch of cupric oxide with a few cubic centimeters of the appropriate acid. Dilute each solution to a volume of 10 cc. and filter from undissolved oxide. Note the color of the resulting solutions. Why should each have a similar color? To each of these solutions add a few drops of ammonium hydroxide until any precipitate which may form is redissolved. To what ion is the new color due? (**206.**)

This reaction of copper salts with ammonium hydroxide is frequently used as a test for the copper *ion*.

3. Water Essential for Ionization. In a *dry* test tube place a few cubic centimeters of a solution of phosphoric acid in alcohol. Try the effect of this solution on litmus. Determine whether or not it will conduct electricity. Pour in 10 cc. of distilled water, stir, and repeat the litmus and conductivity tests. Account for the results.

Grind together in a dry mortar 2 g. of sodium bicarbonate with a gram of oxalic acid ($H_2C_2O_4$). Can you see any evidence of reaction? Add 5 cc. of water. Explain the result.

4. Double Decomposition Reactions in Solution. In each of four test tubes place 2 cc. of silver nitrate solution. Add, to the different tubes, a few drops of solutions of sodium chloride, ammonium chloride, hydrogen chloride, and barium chloride. Note that the precipitate obtained in each case appears to be (and actually is) the same substance. The reaction which took place must, then, have been a reaction between *ions*. Formulate the above reactions in a manner which will bring out this concept.

Prepare some ferric hydroxide by adding a slight excess of ammonium hydroxide to 5 cc. of ferric chloride solution. Heat, to coagulate the precipitate, filter, and wash the solid with water.

Pour 10 cc. of concentrated hydrochloric acid over the ferric hydroxide on the filter paper. Is it soluble? Between what ions did this *neutralization* reaction take place? Write an equation which shows this.

5. Displacement an Ionic Reaction. Coil a short piece of copper wire and of iron wire and drop each into 5 cc. of silver nitrate solution in separate test tubes. What substance is deposited on the wire? Express these reactions in ionic form. The electromotive, or activity, series (**121**), is merely an arrangement of the metals in the order of *decreasing ability to form ions.*

6. Ionization a Reversible Reaction. Prepare a strong solution of cupric chloride by dissolving about a gram of the solid salt in 2 cc. of water. Observe the color of the solution. Add water slowly until the solution becomes distinctly blue, then add 5 cc. of concentrated hydrochloric acid. Account for all of the color changes observed. (**117.**)

7. Effect of a Common Ion. To 10 cc. of zinc sulfate solution add 5 cc. of acetic acid; divide the acidified solution into two parts. To one portion add 3 g. of sodium acetate and warm until the salt dissolves. Pass hydrogen sulfide through each solution for a moment. Account for the result. (**118.**)

8. Electrolysis. Three types of electrolysis may be distinguished: (*a*) when *primary products* are obtained at both electrodes, (*b*) when a primary product is obtained at one electrode and a *secondary product* at the other, (*c*) when secondary products are obtained at both electrodes.

Use the same electrodes which you employed in the conductivity tests, but for the cell, obtain a small U-tube, and insert the electrodes in the arms of the U-tube. Place in the tube a dilute solution of hydriodic acid, connect the electrodes to a source of direct current, and permit the current to flow for five minutes. Note that a colorless gas (hydrogen) is evolved at one electrode, while the other electrode becomes coated with a brownish deposit (iodine). This coating may be removed by rubbing with a moist filter paper.

Clean the apparatus and fill it with a solution of copper sulfate. Pass the current for a few minutes. Notice that in this case the pole at which hydrogen was evolved in the above experiment becomes plated with copper, while at the other electrode oxygen is evolved. Account for this liberation of oxygen. The coating of

copper may be removed by dipping the electrode for a moment in warm dilute nitric acid. Wash off the acid with care.

Finally place in the apparatus a dilute solution of sodium sulfate and pass a current. What products are obtained in this case? After the cell has been in operation for five minutes drop into the side arms small pieces of litmus paper of each color. What substances are being formed in the solution about the poles?

9. Polarity Test. It is frequently necessary to determine which is the positive wire of an electrical outfit. This may be simply done as follows. Moisten a filter paper with potassium chloride solution to which you have added a few drops of phenolphthalein solution. (Phenolphthalein is an *indicator* which is colorless in neutral and acid solution, and pink in the presence of a base.) Place the terminal wires of the conductivity circuit about 2 cm. apart on the wet filter paper until a pink color develops around one wire. Is this the positive or negative terminal? State reasons for your answer. In each of the three experiments of section (8) tell what product was formed at the anode and what product was formed at the cathode.

10. Faraday's Law. Faraday's Law is a statement of the fact that a given quantity of electrical energy will liberate *equivalent* amounts of different elements from solutions of their salts. A *gram equivalent weight* of any element will require for its deposition 96,500 coulombs.

Students will work in pairs on this section. Secure two electrodes of sheet copper and two of sheet tin. The surface of each electrode should be polished with fine emery paper until they are clean and bright. Bend the upper part of each electrode at right angles so that they will hang in a small beaker. Scratch a number on each electrode and weigh each to the nearest centigram — or more closely, if possible.

Place the weighed copper electrodes in one small beaker and the tin electrodes in a second beaker of the same size. Connect one copper electrode with one of the tin electrodes in the second beaker. The other electrodes are connected with a source of direct current, a 60 W. electric light bulb being placed in series with the apparatus, to provide the necessary resistance. Cover the copper electrodes with a 1 N solution of copper sulfate and the tin electrodes with 1 N solution of stannous chloride. Turn on the current and allow the electrolysis to continue for about an hour.

Copper and tin are dissolved from the respective anodes and deposited on the cathodes. Take care that crystals of tin do not grow far enough out from the pole to short-circuit the cell. After the current is turned off, remove the copper *cathode* and the tin *anode*, wash with distilled water, and dry them by holding them *several inches* above a low Bunsen flame. When thoroughly dry, weigh them accurately. Note the gain in weight of the copper pole and the loss in weight of the tin electrode. (*Note:* the deposited tin is in crystalline form, and it is very difficult to dry this cathode without loss of some tin. Hence the loss in weight of the anode is determined. This should, of course, be equal to the gain in weight of the cathode.)

From the weight of copper deposited, calculate what weight of tin should have been deposited at the same time. Compare this value with your experimental result, and calculate the per cent error.

QUESTIONS.

1. Based on conductivity and the results of electrolysis, what evidence is there that the unit particles in solutions of acids, bases, and salts bear electric charges?
2. Why do we not conclude that these particles are electrically charged molecules?
3. Mention specific properties of several ions and cite evidence to show that the properties in question are properties of the ion, not of the molecule.
4. Upon what does the virtual completion of ionic reactions depend?
5. By means of an example, show that the "displacement" of ions from solutions is an oxidation-reduction reaction.
6. What evidence is there that the reaction of ionization is reversible?
7. What are the two most important conditions which affect the extent of ionization?
8. Explain why sodium is not obtained as the product of electrolysis in section 8.
9. Describe in successive steps the change involved in the electrolysis of a solution of sodium sulfate.
10. Show how experiment 10 demonstrates the accuracy of Faraday's Law.

EXERCISE VIII.

QUANTITATIVE DETERMINATION OF THE SOLUBILITY OF A SALT.

MATERIALS: Potassium dichromate.
SPECIAL APPARATUS: Horn pan balance, thermometer, weights.

Two students will work together at the start of this exercise.[1] While one prepares the solution, the second will carefully clean and dry four porcelain evaporating dishes and weigh each as accurately as possible on the platform balance (or on the horn pan balance if greater accuracy is desired). Each student will, however, determine by himself two solubility values and draw his own solubility curve. Record each weighing as soon as it is made and be careful not to confuse the dishes.

1. Preparation of the Solution. In a flask of suitable size heat about 150 cc. of water[2] to a temperature of 95°–100°, and add powdered potassium dichromate, maintaining the temperature just below 100°. Agitate the solution after each addition of the salt until some of the solid remains undissolved. The solution is now saturated. Definition? Since the rate of solution decreases as saturation is approached, be sure to allow time enough near the end for the solution to become truly saturated.

2. Determination of Solubility. Allow the dichromate solution to cool to about 85°, let any sediment settle, read the temperature exactly, and decant directly into one of the weighed dishes what you estimate to be 25 cc. of solution. Do not try to filter the solution, nor to measure the volume you take, as this would

[1] Where the time for the laboratory work is sufficient, each student should make a greater number of determinations than specified, for more reliable curves are obtained in this way. In such cases, a correspondingly larger volume of solution should be prepared. Different temperatures for the solubility determination may be assigned to different students and the average solubility curve for the division plotted for comparison with individual results.

[2] In case this exercise is performed by several successive divisions, considerable economy of material may be gained by having the second (and following) classes use the waste solution, turned in by the previous class, instead of water.

introduce a serious error. Take this dish and solution at once to the scales and weigh it accurately.

Permit the remainder of the saturated dichromate solution to cool to about 60°, and decant another portion into a second of the weighed dishes, noting the exact temperature of the solution at the time you draw the sample. The second student will decant two portions into the remaining dishes, choosing different temperatures (say 70° and 30°) from those already chosen.

Evaporate these solutions to dryness, preferably on the steam bath. If steam baths are not available, use a very low Bunsen flame for the heating, holding the burner in the hand and keeping it in constant motion under the dish. If, toward the end, there is a tendency for the solution to spatter, a watch glass may be placed over the evaporating dish. Particles of dichromate which spatter on to the cover glass must be scraped back into the dish before the final weighing is made. When all the visible liquid has disappeared, heat more strongly until the residue is perfectly dry. Take care not to melt the salt, for this would cause some decomposition. Cool, and weigh the dish with the residue. From the data, calculate the weight of potassium dichromate which is held in solution by 100 g. of water at the temperature at which each sample was taken. Suppose you obtained the following data:

Wt. of dish with solution	110.5 g.
Wt. of empty dish	85.1
Wt. of solution	25.4 g.
Wt. of dish with residue	91.3 g.
Wt. of empty dish	85.1
Wt. of residue	6.2 g.

Wt. of solution − wt. of residue = 19.2 g. = wt. of water.
19.2 g. of water dissolved 6.2 g. of $K_2Cr_2O_7$.
100 g. of water will dissolve 32.3 g. of the salt.

Plot the values which you and your partner obtained on the accompanying chart, Fig. 6, and connect the points by a smooth curve. Indicate clearly which of these values represent your own determinations, and which are borrowed. If time permits, secure some ice and determine a solubility value at a temperature below that of the room.

All residues and unused solutions of the dichromate must be emptied into jars provided for that purpose on the side tables. Do not throw them away.

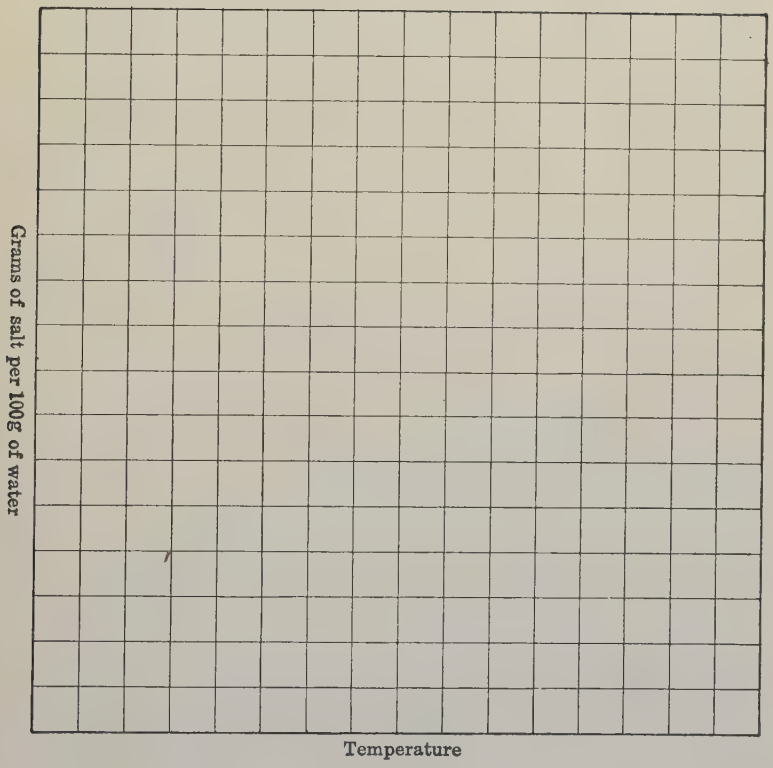

Fig. 6.

QUESTIONS.

1. What is meant by the term "solubility"?
2. Why should there be an undissolved excess of the salt in the solution when the sample is withdrawn?
3. What are the legitimate sources of error in this experiment?
4. What are some of the errors of manipulation which you committed and which serve to explain the inaccuracy of your solubility curve?
5. With unlimited time and apparatus how might you secure more accurate results?
6. How is a solubility curve constructed? What does a break in a solubility curve indicate?
7. Why is a solubility curve a useful device for representing solubility?
8. From your curve, what is the solubility of potassium dichromate at 75°, 50°, 25°, 0°?

EXERCISE IX.

COLLOIDS.

MATERIALS: Bone black, cottonseed oil, ferrous sulfide, salt. *Solutions:* Acetic acid (1 N), aluminum sulfate, ammonium polysulfide, arsenic trichloride, arsenious acid, barium hydroxide, cadmium sulfate, copper sulfate, ferric chloride (30%), gelatine, gold chloride (1%), hydrochinon, iodine in potassium iodide, litmus, lead acetate, microcosmic salt, nickel sulfate, phenolphthalein, potassium carbonate, potassium chromate, potassium iodide (2 N), silver nitrate, soap, starch paste, tannin, water glass (density 1.1).

SPECIAL APPARATUS: Generator for hydrogen sulfide, parchment cup, Tyndall beam apparatus.[1]

1. Colloidal Silver. To 5 cc. of silver nitrate solution add very dilute ammonium hydroxide (the laboratory reagent with 5 volumes of water) until the precipitate first formed just dissolves. Dilute the alkaline solution to 100 cc. with distilled water. To a 10 cc. portion of the diluted solution add a few drops of a solution of tannin. Result? Try the effect of varying amounts of tannin on other 10 cc. portions of the silver nitrate solution. Try also the effect of adding tannin solution to a heated portion. If hydrochinon solution is available, add a few drops of this reducing agent to a portion of the silver nitrate solution. Observe the color of these colloids by transmitted and by reflected light.

2. Colloidal Gold. Dilute *one* cubic centimeter of a 1% gold chloride solution to 100 cc. with distilled water. Add three or four drops of potassium carbonate solution and divide into two portions. To one portion, add tannin solution drop by drop. Reduce the other portion with a very little hydrochinon solution. Account for the difference in color of the two colloids which result. Examine these colloids by transmitted and by reflected light. Pass a focused beam of light through the solutions (apparatus on

[1] For securing a beam for the Tyndall effect, a small arc light with suitable lens serves well. Instead of the arc light, a light bulb such as those used in projection lanterns may be used; or, with the proper current (3 amps., 8 v.), automobile headlight bulbs with a strong converging lens give a satisfactory beam of light. In such a case, it helps to place a black screen behind the colloid under examination.

side table). Is the path of the beam through the solutions visible? What is this phenomenon called?

3. Colloidal Sulfides. Set up a hydrogen sulfide generator, using a medium sized bottle for the generator. Pass hydrogen sulfide for a few minutes into a solution of arsenic trioxide. (Hood.) Examine the resulting solution for the Tyndall effect. Try to filter a little of it. Set two-thirds of this solution away for use in (5). To the remainder, add a few cubic centimeters of concentrated hydrochloric acid. Explain the result. **(145.)**

Pass hydrogen sulfide from the generator into 10 cc. of a solution of arsenic trichloride and compare the result with the above. Write the equation for each reaction and explain the results.

In chemical analysis sulfides frequently form in the colloidal state which makes filtration very difficult. Dilute 5 cc. of nickel sulfate solution to a volume of 50 cc., heat to boiling and add 5–10 cc. of ammonium polysulfide. Try to filter the nickel sulfide which formed. Does any pass through the paper?

Pass hydrogen sulfide into a dilute solution of cadmium sulfate for some time. A yellow precipitate of cadmium sulfide first forms, but continued passing of hydrogen sulfide converts part of this precipitate into the colloidal state. Try to filter some of the precipitate and try the Tyndall effect on the filtrate. The excess hydrogen sulfide subdivided, or *peptized*, some of the precipitate first formed. In analytical separations the use of too much hydrogen sulfide should be carefully avoided.

4. Colloidal Ferric Hydroxide. Into a flask (200 cc.) of boiling water add, drop by drop, a 30% solution of ferric chloride until a dark red colloid results. Equation? Colloidal ferric hydroxide is one of the most stable of the colloids of the suspensoid type. Try the Tyndall effect. Preserve this colloid for use in (5).

5. Coagulation of Colloids. Colloids may be coagulated by neutralizing their electrical charge. Positive colloids are most readily coagulated by adding solutions containing negative ions of high valence, and negative colloids by adding solutions containing positive ions of high valence. To part of the arsenious sulfide colloid prepared in (3), add aluminum sulfate solution and note the result. To part of the ferric hydroxide colloid prepared in (4) add a solution of microcosmic salt ($NaNH_4HPO_4$). Now add some of the arsenious sulfide colloid to the ferric hydroxide colloid. Explain the result in each case.

6. Protective Colloids. Fill two test tubes two-thirds full of water. To one add four drops of lead acetate solution and to the other the same amount of potassium chromate solution. In a beaker, mix one-half of these dilute solutions. To the remaining portions add 1 cc. of gelatine solution and mix them in another beaker. After standing a few minutes try to filter the two precipitates on separate filters. Pass the solutions several times through the filter and explain the results obtained.

7. Silicic Acid Gel. Pour 10 cc. of sodium silicate solution (water glass) of about 1.1 density into an equal volume of normal acetic acid and mix well. Colloidal silicic acid is formed. Use the Tyndall effect to prove that a colloid has been obtained. Set this colloid aside for some time — or until the next exercise. On standing, it hydrates to a clear solid gel. Fruit jellies are gels of similar structure. Of course they are not prepared from water glass.

8. Crystal Formation in Gels. Partly fill several test tubes with the same sodium silicate-acetic acid mixture used in (7). To each tube add 2 cc. of 1 N lead acetate solution. Set the tubes aside for some hours until the gel sets well. On top of this solidified gel pour several cubic centimeters of 2 N potassium iodide solution. Stopper the tubes and let them stand for a week or ten days. The potassium iodide solution diffuses slowly into the silica gel, and as it encounters the lead acetate, reaction occurs. Since the rate of reaction is slow, good crystals of lead iodide usually result.

9. Emulsions. In a bottle shake vigorously 5 cc. of some oil with about 100 cc. of water. Note that the two liquids quite readily separate into layers as soon as the shaking is interrupted. Now add 5 cc. of soap solution and again shake vigorously. The soap *emulsifies* the oil by forming a protecting coat about each droplet of the oil.

Emulsions may be broken down by destroying the protecting film. Acidify the oil-water-soap emulsion just prepared with hydrochloric acid. Acids destroy soap, and the emulsion "breaks." From the results in this experiment explain the cleansing action of soap.

10. Adsorption. In a test tube shake 10 cc. of litmus solution (an organic dye) with 2–3 g. of animal charcoal (bone black) or "Norite." Filter, and observe the color of the filtrate.

In a 100 cc. graduate mix 10 cc. of cadmium sulfate solution and 5 cc. of copper sulfate solution. (These amounts are chosen in

order to obtain equal amounts of each salt, since the cadmium sulfate solution is 0.5 N and the copper sulfate solution 1 N.) To the mixture add ammonium hydroxide until strongly alkaline and dilute to 100 cc. If a precipitate appears on dilution, add sufficient ammonium hydroxide to dissolve it. Let two or three drops of this dilute solution fall on the center of a dry filter paper and soak in for a minute. Then place the paper over a beaker containing 5 cc. of ammonium sulfide solution. The ammonium sulfide evolves hydrogen sulfide, which reacts with the salt of cadmium and of copper on the filter paper. After a minute or two remove the paper and note the rings which have formed. There should have formed an outer water ring, where no reaction occurred (why?), then a yellow ring of cadmium sulfide, and a dark brown central spot of copper sulfide. The filter paper adsorbed the metal ions, but to varying degrees.

On a fresh filter paper let fall a drop of phenolphthalein solution, and about an inch distant a drop of barium hydroxide solution. The rings should meet, but note that the pink color of the indicator does not develop until the rings have overlapped for some distance. Explain.

11. Dialysis. Obtain from the instructor a parchment cup.[1] Partly fill this with cold starch paste to which has been added a little common salt, and the whole well mixed with distilled water. Float this cup in a beaker of water. After some time test the outside water for a chloride by the addition of a little silver nitrate solution. See if the solution outside the cup will give a test for starch when mixed with a few drops of iodine dissolved in potassium iodide solution. Explain your results. (**141.**)

QUESTIONS.

1. Explain the fact that gold and silver salt solutions may be reduced, setting free the metal, without the formation of a visible precipitate.
2. How do colloidal suspensions differ from ordinary suspensions? From solutions?
3. Account for the formation of a colloidal suspension of arsenious sulfide when hydrogen sulfide is passed through a solution of arsenious acid.
4. Account for the formation of colloidal ferric hydroxide in the presence of an ionized substance (HCl) when ferric chloride is hydrolyzed.

[1] Such cups are prepared by folding a wet sheet of parchment paper over a beaker or bottle of convenient diameter and tying it in place until dry. The cup may then be slipped off and trimmed.

5. Why do colloidal arsenious sulfide and ferric hydroxide cause mutual coagulation when they are mixed?

6. Which is more efficient in coagulating colloidal arsenious sulfide, aluminum sulfate solution or sodium chloride in the same molar concentration?

7. What is meant by a protective colloid?

8. What is an emulsion? How are emulsions prepared?

9. What is meant by adsorption? Mention two important applications of the adsorptive power of carbon.

10. How may colloidal solutions be freed from dissolved electrolytes?

EXERCISE X.

ACIDS. PREPARATION OF ACIDS.

MATERIALS: Borax, ferrous sulfide, hydrogen disodium phosphate, iodine, manganese chloride, marble (lumps), phosphorus (red), phosphoric acid (syrupy), potassium iodide, sodium acetate (anhydrous), sodium chloride, sodium sulfate. *Solutions:* barium chloride, bromine water, chlorine water, hydrogen sulfide water, silver nitrate, water glass.

SPECIAL APPARATUS: Generator for hydrogen sulfide, pyrex test tube.

I. ANHYDRIDE WITH WATER.

1. Preparation of Carbonic Acid. Fit a medium-sized bottle with a two-hole stopper carrying a thistle tube reaching nearly to the bottom of the bottle and a delivery tube extending into a test tube about one-third full of water. In this generator bottle place a few lumps of marble and just cover the pieces of marble with water. Add dilute hydrochloric acid through the thistle tube until gas is evolved freely. More acid may be added from time to time as required. Conduct the gas through the water in the test tube for several minutes, then test the solution with a piece of blue litmus. How do you account for the slow change in color of the litmus?

2. Preparation of Sulfurous Acid. Return the unused marble from the previous experiment to the pan on the side table. Wash out the generator, place in it 2–3 g. of sodium sulfite, cover with water, and add dilute hydrochloric acid as before, leading the gas into a test tube of water. Test the resulting solution with litmus. Smell of the solution. From the odor, what do you infer about the stability of sulfurous acid?

3. Preparation of Acid by Oxidation of Non-Metal. If a non-metal is burned in air and the resulting oxide is dissolved in water, an acid results. When an oxidizing acid in solution reacts with a non-metal, a similar result is obtained, although it is not necessary to assume the intermediate formation of the acid oxide. Take a small amount of red phosphorus — not over 1 g. — in a porcelain dish or casserole and add 20 cc. of nitric acid. Boil (Hood) until

$Ca\ CO_3 + HCl \rightarrow \frac{1}{2}\ Ca$

the phosphorus dissolves, then evaporate carefully to dryness to remove excess nitric acid. Avoid overheating during this evaporation. To the residue add 10 cc. of water and warm gently until most of the solid dissolves. Test the solution with litmus. What acid was formed?

II. Acid with Salt. Displacement of Volatile Acid.

4. Acetic Acid. A Volatile Liquid Acid. Provide a pyrex test tube with a tightly fitting rubber stopper carrying a bent delivery tube which is arranged to lead into a dry test tube. In the pyrex test tube place 5 g. of anhydrous sodium acetate, add about 10 cc. of concentrated sulfuric acid, insert the stopper and delivery tube and heat gently. The sulfuric acid should not be boiled. Distill off only about 1 cc. of liquid. Note the characteristic odor of this pure acetic acid. Test it with litmus. **Caution**: *Allow the hot sulfuric acid in the pyrex test tube to cool to room temperature before washing out the tube.*

5. Hydrochloric Acid. A Gaseous Acid. Clean the apparatus used in (4) after allowing it to cool to room temperature. Place in the test tube 2–3 g. of common salt, moisten with a drop of water, and add 3–4 cc. of concentrated sulfuric acid. Conduct the evolved gas into a test tube which contains a few drops of water. Note the fuming of the hydrogen chloride gas as it comes in contact with moist air. Test the solution with litmus.

In a clean test tube place a gram of manganese chloride. Add 5 cc. of concentrated sulfuric acid and warm gently. Make a test with moist litmus paper to determine whether hydrochloric acid is formed in this case. Why is it usual to start with sodium chloride in the preparation of hydrochloric acid?

Heat a gram of sodium chloride with 3 cc. of syrupy phosphoric acid and two or three drops of water. Determine whether hydrochloric acid is formed on heating this mixture. Phosphoric acid is a very stable acid of high boiling point and does not distill over.

6. Reaction of Sulfuric Acid with an Iodide. Since hydriodic acid resembles hydrochloric acid in many ways, it might be expected that it could be prepared in the some manner as hydrochloric acid. Test the correctness of this supposition in the following manner. In a test tube place a gram of potassium iodide and add 2 cc. of water. Run a little concentrated sulfuric acid

$HC_2H_3O_2$

blue red

[illegible]

[illegible] with air

Turns blue red

$MnCl_2 + H_3SO_4 \rightarrow 2HCl + MnSO_4$

Turns blue red

NaCl [illegible]

$H_3PO_4 + NaCl \rightarrow 3HCl + Na_3PO_4$

HCl is formed

$TrSO_4$ — HI.

down the side of the test tube, watching for any evidence of reaction. Determine by a litmus test whether or not any hydriodic acid is evolved; if so, is the product pure? This reaction is studied further in XIII, 5.

III. Acid with a Salt. Formation of an Insoluble Salt.

7. Preparation of Phosphoric Acid. Weigh about 5 g. of hydrogen disodium phosphate. Dissolve this, in a beaker, in 100 cc. of hot water and add barium chloride solution until no more precipitate forms. Filter, discarding the filtrate, and washing the precipitate with a little water. Dilute 5 cc. of concentrated sulfuric acid with 100 cc. of water. Wash the precipitate off the paper into a beaker, using the wash bottle for this purpose, and add 25 cc. of the diluted acid just prepared. Warm, stir thoroughly, and filter into a porcelain dish and evaporate the liquid to about one-fourth of its original volume. The liquid should be of syrupy consistency when cold. Test the product with litmus. Write equations for the reactions taking place.

IV. Acid with a Salt. Formation of an Insoluble Acid.

8. Silicic Acid. Take a few cubic centimeters of sodium silicate solution (water glass) and acidify with hydrochloric acid. What is the precipitate?

9. Boric Acid. Dissolve 5 g. of crystallized borax in 10 cc. of boiling water and add concentrated hydrochloric acid drop by drop until the solution is distinctly acid to litmus, and remains so after shaking. Cool the test tube under the tap. Boric acid will crystallize on short standing. Boric acid and silicic acid are the only common acids which are insoluble, or difficultly soluble. Represent by equations the formation of boric acid in the above experiment. The acid which crystallizes from solution has the formula, H_3BO_3.

V. Hydrolysis of the Non-Metal Halide.

10. Hydrobromic Acid. In a small flask place 50 cc. of bromine water and add about a gram of red phosphorus. Stir the mixture well, heat to boiling, and filter, passing the solution several times through the filter until a clear filtrate is obtained. Note and ex-

Silicated perpetuate

$Na_2B_4O_7 + H_2O + 2HCl$

$H_3BO_3 + 2NaCl +$

plain the color change which has taken place. Test the filtrate with litmus. In order to demonstrate that this solution contains hydrobromic acid, add a little silver nitrate solution and 5 cc. of dilute nitric acid to a small portion. A cream-colored precipitate of silver bromide will form. What other acid was present along with the hydrobromic acid? How could you effect a partial separation of these two acids?

VI. Displacement of a Non-Metal Ion.

11. Hydriodic Acid. Powder 0.5 g. of iodine and suspend it in 20 cc. of water. Pass a slow stream of hydrogen sulfide (from a Kipp generator) through this suspension, stirring frequently, until the iodine disappears. Heat the solution to boiling for a few minutes to expel dissolved hydrogen sulfide, and filter out the precipitated sulfur. Test the solution with litmus. Iodine is a more active non-metal than sulfur, and, consequently, displaces the sulfide ion from hydrogen sulfide. This is a common method of preparing hydriodic acid.

Mix 5 cc. of chlorine water with an equal volume of hydrogen sulfide water. Does chlorine displace sulfide ion? Would this be a practical method of obtaining hydrochloric acid?

QUESTIONS.

1. Write equations to illustrate the formation of five acids by the reaction of the anhydride with water.
2. Explain the fact that carbon dioxide is evolved when hydrochloric acid is added to a carbonate, but carbon dioxide dissolves in water to form carbonic acid.
3. What product is usually obtained when a non-metal is oxidized in the presence of water?
4. Why is sulfuric acid used in preference to phosphoric acid in the preparation of acetic and hydrochloric acids from their salts?
5. In what cases is the preparation of an acid by the action of sulfuric acid on a salt not a suitable method?
6. Is the reaction of sulfuric acid on a bromide a suitable method for preparing pure gaseous hydrobromic acid? Why?
7. Why does the reaction of hydrochloric acid on sodium silicate proceed to virtual completion?
8. Is the hydrolysis reaction of phosphorus tribromide reversible? Why?
9. Show electronically what happens when hydrogen sulfide is bubbled through a suspension of iodine in water.
10. Which of the methods used in the preparation of acids finds most extensive application? Why?

EXERCISE XI.

ACIDS II. GENERAL REACTIONS OF ACIDS. THE HYDRO- ACIDS.

MATERIALS: Calcium fluoride, copper, ferrous sulfide, lead dioxide, manganese dioxide, paraffin, zinc. *Solutions:* Antimony trichloride, bromine water, cadmium sulfate, copper sulfate, chlorine water, hydrobromic acid, hydrogen sulfide water, lead acetate, mercuric chloride, mercurous nitrate, silver nitrate, zinc sulfate.

SPECIAL APPARATUS: Generator for hydrogen sulfide.

Solutions of acids show two sets of properties, due to the positive and negative ion respectively. Since the positive ion of all acids is the same (hydrogen ion), acids show certain *common properties*, though the *degree* to which these properties are exhibited will depend on the concentration of the hydrogen ion formed. As the student should already be familiar with the general characteristics, he need not actually carry out the experiments under *general* properties, but will merely write up in the notebook the results which would be obtained if the experiments were carried out. In case there is any doubt whatever concerning the result, actually perform the experiment in question.

GENERAL REACTIONS OF ACIDS.

1. Effect of Acids on Litmus. Recall the effect on litmus of the various acids prepared in the preceding exercise. Test with litmus dilute solutions of any other acids available. Why is the litmus effect more pronounced in some cases than in others?

2. Reaction with Bases. Neutralization. Take 5 cc. of zinc sulfate solution, and add about an equal volume of sodium hydroxide. Now add dilute sulfuric acid until the precipitate just dissolves. This reaction could be written:

$$Zn^{++} + 2\,OH^- + 2\,H^+ + SO_4^{--} \longrightarrow 2\,HOH + Zn^{++} + SO_4^{--},$$

or,

$$2\,H^+ + 2\,OH^- \longrightarrow 2\,HOH.$$

Of what reaction, then, does neutralization consist? What is in the solution after dissolving zinc hydroxide in sulfuric acid?

3. Reaction with Basic Oxides. This type of reaction, examples of which were studied in III, may be classed as a variety of neutralization. Generalize the statement concerning the reaction of acids with basic oxides.

4. Reaction with Salts. In X, the reaction of sulfuric acid with sodium chloride and sodium acetate, and of phosphoric acid with sodium chloride, was demonstrated. Make a general statement indicating when an acid may be expected to react with a salt. Name three common salts with which the common acids will react.

5. Reaction with Metals. Place a small piece of zinc in each of two test tubes. Add dilute hydrochloric acid to one and dilute sulfuric acid to the other. Warm gently if necessary to start the reaction. Test the evolved gas with a lighted splint. What gas is evolved? Repeat, using copper with the same two acids. Make a general statement about the reaction of acids with metals.

Specific Reactions of the Hydro- Acids.

6. The Halogen Hydrides. The acids of chlorine, bromine, and iodine show very similar reactions since these non-metals themselves are so closely related.

(*a*) *Reaction with Oxidizing Agents.* In separate test tubes treat 5 cc. of hydrochloric, hydrobromic, and hydriodic acids with about 0.5 g. of manganese dioxide. Warm the mixture and smell (*caution*) of the reaction product in each case. What are the products formed? Repeat, using lead dioxide in place of manganese dioxide.

(*b*) *Formation of Insoluble Precipitates.* Carry out the sets of reactions indicated below, and record the results in tabular form. Note carefully the color and characteristic appearance of the precipitates obtained. In each case use not more than 5 cc. of the acid, diluted with an equal volume of water.

	$Pb(C_2H_3O_2)_2$	$HgNO_3$	$AgNO_3$
HCl	white	yellow	w—
HBr			yellow
HI	brown		

(*c*) *With More Active Non-Metals.* Try the reaction of a few cubic centimeters of hydrobromic and hydriodic acids with an equal

$HCl + Zn \rightarrow ZnCl + H\uparrow$

$H_2SO_4 + Zn \rightarrow ZnSO_4 + H_2$

volume of chlorine water, and of hydriodic acid with a little bromine water. Express the reactions by equations. Compare these reactions with those of X, 11.

7. Hydrofluoric Acid. This hydro- acid is much weaker than the three others of the group and differs also in that it is dibasic, the formula of hydrofluoric acid in aqueous solution being H_2F_2. Its only reaction of importance is the reaction with silica and silicates.

Coat a clean square of glass with a thin layer of paraffin. When cold, scratch some small design through the paraffin with a knife point so as to expose the glass. On this plate make a paste of 2 g. of calcium fluoride and a little concentrated sulfuric acid, mixing with a wooden splint. Let this stand for half an hour, then wash off the excess fluoride, remove the wax coating, and observe the etching on the glass. Of what material would you make a container for hydrofluoric acid?

8. Hydrogen Sulfide. Examine the laboratory generator for hydrogen sulfide in the hoods. (**162.**) Write the equation for the reaction by which this gas is obtained in these generators.

Smell of a bottle of hydrogen sulfide water. Test the solution with litmus. A deposit of sulfur may usually be observed in a solution of this acid. Account for its formation. To 10 cc. of hydrogen sulfide water add 5 cc. of dilute nitric acid. Express the reaction by an equation. Recall the action of the halogens with hydrogen sulfide (X, 11). Show by the electron method that there is no essential difference between the oxidation of the sulfide ion by nitric acid and by the halogens.

The chief use of hydrogen sulfide is as a precipitating agent in the laboratory. In separate test tubes place 2 cc. of a solution of any soluble salt of mercury, copper, cadmium, and antimony. Add a little hydrogen sulfide water to all the tubes and note the colors of the precipitates produced. Write equations for all the reactions.

9. Test for Hydrogen Sulfide. The odor of this gas is very characteristic, but because of its poisonous nature it should be sniffed with discretion — not breathed. A better test is to expose a filter paper moistened with a solution of lead acetate to the gas under examination. Hydrogen sulfide causes the paper to darken because of the formation of lead sulfide. Try this test, using a few cubic centimeters of hydrogen sulfide water in a beaker.

QUESTIONS.

1. Why do solutions of acids show two sets of reactions? Why do they exhibit certain similar reactions?
2. What is the essential reaction of neutralization?
3. Under what conditions do acids react extensively with salts?
4. What must be true of the activity of a metal in order that it may react with dilute solutions of the non-oxidizing acids?
5. Make a general statement of the reactions of acids and explain why we ascribe these to hydrogen ion.
6. Why do the hydro- acids of the halogens exhibit greater similarity in their reactions than do the common acids?
7. Illustrate by equations the oxidation of the common hydro- acids by manganese dioxide, lead dioxide, and hypochlorous acid.
8. Under what conditions do the hydro- acids of the halogens react with solutions of salts? Name three salts with which they react.
9. Describe the electrolysis of a solution of hydrochloric acid and show that the discharge of the ions involves electron transfer.
10. Account for the reaction of hydrofluoric acid with silica (an acid anhydride).

EXERCISE XII.

ACIDS III. THE OXY-NITROGEN ACIDS.

MATERIALS: Ammonium nitrate, antimony, benzene, copper turnings, lead nitrate, sodium nitrate, sodium nitrite, sulfur (flowers), tin (mossy), zinc (granulated). *Solutions:* Acetic acid, ammonium sulfide, barium chloride, copper sulfate, hydrogen sulfide water, ferric chloride, ferrous sulfate.

SPECIAL APPARATUS: Pyrex retort.

1. Preparation of Nitric Acid. Nearly fill a 500 cc. bottle with water. Stand in it an empty test tube; this is to be the water-cooled receiver for the nitric acid. By means of a folded paper introduce 10 g. of sodium nitrate into a pyrex retort without allowing any solid to adhere to the neck of the retort. Then by means of a funnel run in 20 cc. of concentrated sulfuric acid. Insert the neck of the retort into the test tube receiver (Fig. 7). The whole apparatus will support itself. Heat the retort rather slowly, holding the burner in your hand, and boil the mixture gently until a few cubic centimeters of the product has distilled into the receiver. Let the retort cool to room temperature before you attempt to clean it.

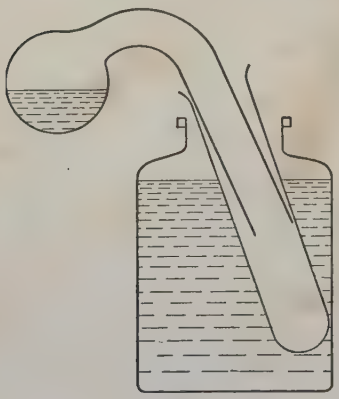

FIG. 7.

Since the temperature is kept rather low, and an excess of sulfuric acid is used, the reaction proceeds according to the following equation.

$$NaNO_3 + H_2SO_4 \longrightarrow HNO_3 \uparrow + NaHSO_4.$$

The nitric acid prepared in this way is very concentrated. Be careful not to spill any of it on your hands or clothing. Save the acid for use in (8).

2. Instability of Concentrated Nitric Acid. Since an excess of sulfuric acid was used in the preceding preparation, the acid which

distills is very strong. Account for the brown color of the acid. Why does the concentrated nitric acid in some of the reagent bottles have a yellow color? (**170.**)

3. Reactions as an Acid. Nitric acid is one of the strongest of the acids. Write equations to illustrate the ordinary reactions of nitric acid as an acid. Refer to X.

The most important reactions of nitric acid are the oxidation-reduction reactions into which it enters. Several cases may be distinguished, depending on the concentration of the acid used.

4. Ordinary Dilute Nitric Acid with a Metal. In a 100 cc. bottle place about 10 g. of copper turnings. Fit the bottle with a two-hole stopper carrying a thistle tube reaching to the bottom of the bottle. Provide a delivery tube arranged to collect a gas over water. Through the thistle tube add enough dilute nitric acid to cover the turnings, and start the reaction by adding a few cubic centimeters of concentrated nitric acid. After the reaction has proceeded a short time, note the color of the liquid in the generator bottle. What causes this color? What compound is in solution? Collect two bottles of the evolved gas. After filling the bottles, allow the gas to pass for a moment into 10 cc. of ferrous sulfate solution. The gas is absorbed, forming a dark-colored molecular compound of indefinite composition, which may be represented as $FeSO_4 \cdot x\,NO$. This reaction is made use of in the test for nitric acid in (7). Stop the reaction by filling the generator with water through the thistle tube. Wash the remaining copper and return it to the pan in the hood. What is the gas you have collected? (**172.**) Where did it come from? You now have experimental proof of the main products of the oxidation-reduction reaction of copper with dilute nitric acid. From this knowledge write the full equation, using the electron method and showing all steps.

Remove one bottle of the gas from the water pan and note its reaction with oxygen of the air. What is the new compound formed? Some of this gas must have formed at the start of the previous experiment since the generator was full of air. Why did it not pass into the receiving bottle? (**176.**) Save the other bottle of nitric oxide for (14).

5. Dilute Nitric Acid with Sulfides. Prepare a little copper sulfide by treating 5 cc. of copper sulfate solution with 10 cc. of hydrogen sulfide water. Filter the precipitate, scrape it into a test tube, and add 5 cc. of dilute nitric acid prepared by diluting

$$3Cu + 8HNO_3 \rightarrow$$
$$3Cu(NO_3)_2 + 2NO + 4H_2O$$

the concentrated reagent with three volumes of water. Warm the mixture and test the evolved gases for hydrogen sulfide. (X, 20.) Did you expect to obtain hydrogen sulfide? (X, 19.)

6. Oxidation of Low-Valence Metal Ion. In separate test tubes treat 5 cc. of ferrous sulfate and ferric chloride solutions with an equal volume of sodium hydroxide. Note the colors of the precipitates when first formed. To a fresh portion of ferrous sulfate solution add 5 cc. of dilute nitric acid, boil for a few minutes, and then add sodium hydroxide to alkalinity. What valence of iron was formed after the nitric acid treatment?

7. Test for Nitric Acid. Place five drops of dilute nitric acid in a test tube and add 5 cc. of concentrated sulfuric acid. Incline the test tube and run in 10 cc. of ferrous sulfate solution. Try to make this solution form a layer over the heavier sulfuric acid. The brown (or black) color which develops constitutes a delicate test for nitric acid. Express the reactions by equations. (Refer to section 4.)

8. Concentrated Nitric Acid with a Non-Metal. Place a pinch of powdered sulfur in a test tube, add 5 cc. of concentrated nitric acid (which you prepared in (1)), and warm for five minutes. (Hood.) Note the color of the evolved fumes, even after air has been displaced from the test tube. (In this reaction, the brown gas is directly formed and is not a product of the reaction of nitric oxide with oxygen.) Dilute the resulting solution with 10 cc. of water — to avoid attacking filter paper — and filter out any undissolved sulfur. To the clear filtrate add a few drops of barium chloride solution. What does the white precipitate prove? From the experimental evidence of these reactions, write the electron equation for the reaction of concentrated nitric acid with sulfur. (Remember that **if**, in this reaction, sulfur dioxide had been the oxidation product, it would pass off from the hot solution as a gas, and consequently the solution would be free of all sulfur compounds. Your tests prove that this is **not** the case.)

9. Concentrated Nitric Acid with Tin and Antimony. Heat a small piece of mossy tin with 10 cc. of concentrated nitric acid for several minutes. Notice the insoluble residue. What is it? Remember that the nitrates of the metals are soluble. (**217.**)

Try the reaction of concentrated nitric acid with a few fragments of antimony. Write electron equations expressing both of these reactions. (**236.**)

10. Aqua Regia. Warm a mixture of a few cubic centimeters of concentrated nitric and hydrochloric acids. (Hood.) What gases are evolved from this mixture? Express the reaction by an electron equation. Aqua regia is a very active mixture and attacks gold and platinum. From the equation which you have just written, determine the proper ratio in which to mix nitric and hydrochloric acids in order to form aqua regia.

11. Very Dilute Nitric Acid with Active Reducing Agents. Dilute 10 cc. of ordinary dilute nitric acid (3 N) with an equal volume of water and pour this over 3 g. of granulated zinc in a porcelain dish. Place this in the hood till reaction is at an end. Do you notice evolution of brown fumes during this experiment? Test for the oxidation-reduction products as follows:

(*a*) Place 5 cc. of the solution in a test tube, make alkaline with sodium hydroxide (litmus test), and heat, holding a moist strip of red litmus in the mouth of the test tube. What volatile substance will turn litmus blue? From what ion did it come, and what compound must have been in solution?

(*b*) Take 2–3 cc. more of the solution, add ammonium hydroxide until any precipitate dissolves, and add a very little ammonium sulfide. Zinc sulfide is the only white, insoluble sulfide.

You now have proof of the oxidation-reduction products of this reaction. Construct the complete equation.

In the previous experiments with nitric acid, it should be kept in mind that a mixture of reduction products of this acid is frequently obtained. However, depending on conditions, one or another of the possible products will predominate, and it is often possible to obtain one product exclusively if conditions are carefully controlled.

12. Nitration. In a small flask mix 5 cc. of concentrated sulfuric acid with 5 cc. of concentrated nitric acid (**not** the acid you prepared in (1)). To this mixed acid add, drop by drop, about 3 cc. of benzene. Shake well during the addition of the benzene, and if the reaction becomes vigorous enough to cause much evolution of red fumes, cool the nitrating mixture a little. Shake for a few minutes after the benzene is all added. Pour the mixture into 200 cc. of water. Mono-nitrobenzene will separate as an oil. Note the characteristic odor of this substance. (Sometimes a little di-nitrobenzene is formed in this reaction; this will

separate in needle-like crystals.) What is the purpose of the sulfuric acid used in this experiment?

13. Nitrous Acid. Acidify (Hood) a gram of sodium nitrate with dilute hydrochloric acid. What are the gases evolved? What conclusion do you make about the stability of nitrous acid?

Dissolve 5 g. of sodium nitrite in 5–8 cc. of cold water. Cool the solution in ice, or add a few pieces of ice directly to the solution. When cold, add acetic acid a few drops at a time. What causes the blue color in the solution? Warm the solution, noting all changes which occur.

Oxides of Nitrogen.

In section (4) you have already studied the common method of preparing nitric oxide, and two of its characteristic reactions. What were the reactions?

14. Nitrogen Dioxide. Open the second bottle of nitric oxide which was collected in (4). While brown fumes of nitrogen dioxide still remain in the bottle, add a few cubic centimeters of water and shake vigorously. Test the solution with litmus. The reaction of this gas with water is of great importance in the arc process for fixing nitrogen. (**168.**) Write an equation for the reaction.

Heat a gram of lead nitrate in a test tube. (Hood.) Identify the visible gaseous product and write an equation for the reaction.

15. Nitrous Oxide. Fit a test tube with a rubber stopper and delivery tube and arrange to collect a gas over water. Place about 5 g. of ammonium nitrate in the test tube and support the tube in an inclined position by a clamp on the lamp stand. Heat the tube cautiously with a small flame, holding the burner in your hand. Collect two bottles of the gas. Do not try to decompose the last of the salt. Express the reaction which takes place by an oxidation-reduction equation expressed electronically.

Lower a little burning sulfur in an iron spoon into a bottle of the gas. Does nitrous oxide support combustion? Into the remaining bottle insert a faint spark on the end of a splint. Try a hot spark. Is nitrous oxide as good an oxidizing agent as oxygen? How might you distinguish nitrous oxide from oxygen? How does nitrous oxide compare in stability with nitric oxide?

within 1½ degree of absolute zero

QUESTIONS.

1. Which of the general methods for the preparation of acids is used for nitric acid?
2. Would hydrochloric acid serve for the preparation of nitric acid from sodium nitrate? Write equations to show the result of heating concentrated hydrochloric acid with sodium nitrate.
3. Illustrate by equations the reactions of nitric acid as an acid. To what ion are these reactions due?
4. By means of equations represent the oxidation of silver, potassium iodide, mercurous nitrate, and arsenic by nitric acid.
5. What does the reaction of nitric acid with tin and antimony show to be the nature of these elements in their high valence?
6. What is the significance of the name "aqua regia"?
7. Would it be feasible to have solutions of nitrous acid as a laboratory reagent? Why?
8. Of what industrial importance is the reaction of nitric oxide with oxygen, and of nitrogen dioxide with water?
9. By what chemical test might you distinguish nitrous oxide and oxygen?
10. Why are nitrous and nitric acids not prepared in commercial practice by the reaction of their anhydrides with water?

EXERCISE XIII.

ACIDS IV. SULFURIC ACID AND OTHER TERNARY ACIDS.

MATERIALS: Arsenic trioxide, calcium carbonate, cloth (colored), copper, crêpe paper (colored), cupric oxide, phosphorus (red), potassium iodide, sodium bromide, starch, sugar, sulfur dioxide (cylinder), zinc. *Solutions:* Barium chloride, bromine water, calcium chloride, iodine in alcohol, lead acetate, silver nitrate, strontium chloride, sulfurous acid.

SPECIAL APPARATUS: Pyrex test tube (60 cc.).

SULFURIC ACID.

1. The Lead Chamber Reaction. Fill a large glass bottle with sulfur dioxide gas from the cylinder in the hood. Moisten a rolled-up filter paper with concentrated nitric acid and thrust it into the gas. Note the red fumes. Remove the paper, add 10 cc. of water, and shake vigorously. Test the resulting solution for the presence of sulfuric acid by adding a little barium chloride solution and hydrochloric acid.

Refer to III, 5, for an illustration of a second method of preparing sulfuric acid.

2. Dehydrating Action of Concentrated Sulfuric Acid. Try the effect of adding a few drops of concentrated sulfuric acid to a little sugar in a test tube. What is the residue? In the same way try the effect of the strong acid on a match stick and a piece of filter paper. What would be the effect of spattering the acid on your clothes or skin?

Measure accurately 20 cc. of concentrated sulfuric acid and pour it into a dry test tube. Measure 70 cc. of water into a small flask and pour the acid from the test tube into the water. Cool the mixture and return it to the graduate. What is the volume of the mixture? A practical use of this dehydrating action was illustrated in XII, 12.

3. Oxidizing Action of Sulfuric Acid. At high temperatures sulfur in the valence 6^+ is not so stable as in the valence 4^+. This follows logically from the equilibrium

$$2\ SO_2 + O_2 \rightleftharpoons 2\ SO_3 + 45{,}200\ \text{cal.}$$

if this is viewed in the light of LeChatelier's Principle. Hence, sulfuric acid when hot and concentrated will react as an oxidizing agent.

Place 5 g. of copper scrap in a large pyrex test tube and add 10 cc. of concentrated sulfuric acid. Heat the acid to gentle boiling (Hood), and let the reaction continue for some time. Smell cautiously of the gas evolved by wafting some of it toward the nose with your hand. Do not put your face over the test tube in order to smell the gas. What substance do you recognize? After a good deal of copper has dissolved, allow the tube to cool and cautiously add an equal volume of water. Heat to boiling and filter the solution. Why is the filtrate blue? Set this aside on a large watch glass to permit the dissolved salt to crystallize. What is it? Write an electron equation for this oxidation-reduction reaction.

4. Action of Sulfuric Acid with a Bromide. Place about a gram of sodium bromide in a test tube and run 5 cc. of concentrated sulfuric acid down the side of the tube. Smell, *cautiously*, of the escaping gas. What familiar product do you recognize? Blow across the mouth of the tube and note the fuming which is characteristic of the halogen acids. Hydrobromic acid is colorless. What causes the reddish color of the gas? If you are in doubt, test the escaping gas with a piece of filter paper moistened with a mixture of starch paste and potassium iodide solution. In the reaction of sulfuric acid with a bromide, a part of the hydrogen bromide escapes oxidation, but enough is destroyed to make the reaction worthless as a source of this acid. Write a full electron equation to account for the oxidation-reduction products just demonstrated.

5. Sulfuric Acid with an Active Reducing Agent. Have ready a filter paper moistened with lead acetate solution and a second paper moistened with starch paste. Place a gram of potassium iodide in a dry test tube and run 5 cc. of concentrated sulfuric acid down the side of the tube on to the solid salt. *Immediately* hold the lead acetate paper near the mouth of the test tube. Note that the first color produced on the paper soon changes. Then hold the starch paper in the vapors, warming the test tube slightly if necessary. Account for all the color changes and from this evidence write the full electron equation for the reaction of concentrated sulfuric acid with potassium iodide.

$2H_2SO_4 + NaBr \rightarrow 2HBr + Na_2SO_4$

6. Acid Properties of Sulfuric Acid Solution. Try the action of dilute sulfuric and of *cold* concentrated sulfuric acid on small pieces of zinc. Allow plenty of time for reaction to proceed, and account for the difference noted. Remember that concentrated sulfuric acid contains only about 2 per cent of water.

Also try the action of dilute sulfuric acid upon calcium carbonate and upon cupric oxide. Write equations to represent the acid reactions of dilute sulfuric acid.

7. Insoluble Sulfates. In separate test tubes take about 5 cc. of solutions of calcium, strontium, barium, and lead salts. Add to each an equal volume of water and a few drops of dilute sulfuric acid. Note the properties of the precipitates. Repeat, each time starting with the same amount of the solutions but diluting with more water until some of the solutions fail to yield a precipitate. Make a comparison of the solubilities of these "insoluble" sulfates.

Sulfurous Acid.

The preparation of sulfurous acid has been illustrated in X, 2. Smell a solution of the acid. What does the odor (sulfur dioxide) indicate about the stability of sulfurous acid?

8. Bleaching with Sulfurous Acid. Treat strips of litmus, crêpe paper, and small pieces of variously colored cloth with small quantities of sulfurous acid solution. They may be left in contact with the solution for some time if desired. Would you consider this acid a very powerful bleaching agent? Why? See if it will remove an ink stain from filter paper.

9. Reducing Action of Sulfurous Acid. To 10 cc. of bromine water add sulfur dioxide water until the red color disappears. Test the resulting solution with litmus. Divide the solution into two parts. To one add hydrochloric acid and a few drops of barium chloride solution. For what is this a test? To the other portion add silver nitrate solution and a little nitric acid. This proves the presence of what compound? From this data construct an electron equation for the reaction of bromine with sulfur dioxide in water solution. Now refer to (4) of this exercise. Observe that the reaction carried out in (4) is exactly opposite to the reaction of bromine and sulfurous acid. This affords a striking example of the necessity for controlling conditions during chemical reactions.

Acids of Phosphorus and Arsenic.

10. Auto Oxidation-Reduction. Prepare a small amount of phosphorous acid, using the method outlined in X, 10. Evaporate the clear solution to dryness and heat the residue moderately. The flashes observed near the end of the evaporation are caused by the combustion of phosphine. Dissolve the residue by warming it for some time with 10 cc. of water, filter (if not already clear) and carefully neutralize the solution with ammonium hydroxide. *Avoid an excess.* Now add a few drops of silver nitrate solution. If your work has been done carefully, a yellow precipitate of silver phosphate will form. Write an electron equation for the effect of heating phosphorous acid. You have identified both products of the reaction.

11. Arsenious Acid. Boil 0.5 g. of arsenic trioxide with half a test tube of water and filter the undissolved solid. Test the filtrate with litmus. Add to the filtrate a *few drops* of a dilute solution of iodine in alcohol. The iodine is reduced to colorless hydriodic acid. Represent the reaction electronically.

12. Arsenic Acid. Heat a gram of arsenic trioxide with 15 cc. of concentrated nitric acid (Hood) until all the powder has dissolved and no more brown fumes are evolved. More nitric acid may be added if necessary. After oxidation is complete, evaporate the solution carefully to dryness to expel the excess of nitric acid. The last few drops of liquid should appear syrupy. This is arsenic acid, but as the evaporation is continued, it is decomposed and the dry residue obtained is arsenic pentoxide. Avoid high temperature, as the pentoxide easily loses oxygen. Dissolve most of the solid in 10 cc. of water and filter. To the filtrate add a drop or two of ammonium hydroxide and a little silver nitrate solution. The precipitate is silver arsenate. Compare it with the silver phosphate prepared in (10).

QUESTIONS

1. In the lead chamber reaction, what substances serve as oxidizing agents?
2. Mention applications of the dehydrating action of sulfuric acid.
3. Why is hot concentrated sulfuric acid an oxidizing agent?
4. Why are different methods required for the preparation of hydrochloric and hydrobromic acids?
5. Why does hot concentrated sulfuric acid attack copper while dilute sulfuric acid has no effect?

6. Mention and illustrate by equations four reactions of sulfuric acid which are due to the fact that its solution contains hydrogen ions.

7. Explain the fact that hot concentrated sulfuric acid oxidizes hydrobromic acid, while sulfur dioxide in solution is oxidized by bromine water.

8. What is meant by auto oxidation-reduction?

9. In terms of atomic structure, explain why phosphorous acid, when heated, yields phosphine and phosphoric acid.

10. Which is the stronger acid, arsenious or arsenic? phosphorous or phosphoric? phosphoric or arsenic?

EXERCISE XIV.

BASES.

MATERIALS: Alizarin, aluminum, ammonium chloride, barium hydroxide, calcium, calcium hydroxide, calcium oxide, cotton cloth, iodine, magnesium ribbon, sodium hydroxide, zinc oxide. *Solutions:* Acetic acid, ammonium chloride, aluminum sulfate, cobaltous chloride or nitrate, copper sulfate, chromium chloride or sulfate, ferric chloride, ferrous sulfate, lead acetate, magnesium chloride, mercuric chloride, nickelous chloride, silver nitrate, sodium chloride, stannous chloride, zinc sulfate.

SPECIAL APPARATUS: 12 cc. iron crucible, 60 cc. pyrex test tube, tin electrodes, U-tube.

GENERAL METHODS FOR THE PREPARATION OF BASES.

1. Active Metal with Water. (*a*) Obtain from the assistant a piece of metallic calcium about the size of a pea. Drop this into half a test tube of water. After reaction is over, test the solution with litmus. If too little water is used, a precipitate will be formed. What is it? What portion of the hydrogen in water is displaced in this reaction?

(*b*) Roll up a 5 cm. strip of magnesium ribbon and place it in a test tube one-third full of boiling water. Is there any evidence of reaction? After several minutes' heating test the water with litmus paper. Why does not the magnesium react appreciably? Now add 5 cc. of ammonium chloride solution and note the rapid evolution of gas bubbles. Again test with litmus and explain the color change. What was the purpose of the ammonium chloride?

(*c*) Warm a strip of aluminum with a few cubic centimeters of mercuric chloride solution until the surface of the metal is well amalgamated with mercury. Wash the aluminum and heat it for a few minutes in half a test tube of water. Is there any evidence of reaction? After a short time a white precipitate of aluminum hydroxide will form. Mercury does not react with water. What is its purpose in this experiment? Why does not pure aluminum react appreciably with water?

2. Basic Oxide with Water. Moisten a fair-sized lump of calcium oxide with a little water. Allow it to stand for some time

and note any evidence of reaction. Test the product (slaked lime) with litmus.

Holding a piece of magnesium ribbon in the tongs, ignite it and let it burn up, collecting the ash on a filter paper. Moisten the ash with a drop or two of water and test with litmus. Why is the color change slow and rather faint? (III, 4.) This method for preparing common bases is of little practical importance except in the case of calcium oxide.

3. Base with Salt. Formation of Insoluble Base. To a little ferric chloride solution add sodium hydroxide. Heat to boiling and filter. Observe the slimy appearance of the precipitate which is characteristic of most of the insoluble bases.

4. Base with Salt. Formation of Soluble Base. This reaction is of little importance at present, although it was formerly the source of much of the potassium hydroxide used. The method is illustrated on a preparation scale in XV, 4.

5. Electrolysis. Partly fill a small U-tube with sodium or potassium chloride solution. Insert tin electrodes and pass a direct current for five minutes. Test the solution around each electrode with litmus. What base is in solution? At which pole was this formed? Electrolysis is the leading commercial method of preparing the alkali hydroxides. **(195.)**

Reactions of Bases.

Like acids (cf. XI), bases possess two sets of properties, due respectively to the positive and negative ion. Since the negative ion is always hydroxyl ion, bases show certain *common* properties, though the *degree* to which these properties are exhibited varies. Why? Using XI, 1–5, as a guide, make a list of the *general reactions* to be expected of bases, and illustrate each by an equation.

Since the positive ion of a base is a metal ion, bases containing similar metals should be somewhat alike. This means that **specific** reactions of bases will not be quite so pronounced as is the case with acids, but that a small group of bases may have quite similar properties. Reference to the halogen hydrides (XI, 6) will remind you that acids containing similar negative ions also exhibit very similar properties.

6. Stability of Bases. Place a small lump of sodium hydroxide in an iron crucible and heat with a strong Bunsen flame. Try to get the crucible red hot. After a few minutes allow the melted

mass to cool. Have you decomposed the base? *Do not add cold water to the hot crucible.*

Heat a gram of barium hydroxide to redness in the same way. Remember that this base crystallizes with eight molecules of water of hydration (*e.g.*, $Ba(OH)_2 \cdot 8\ H_2O$). This water is vaporized on heating. Is there any evidence of further reaction?

In a dry test tube place some calcium hydroxide and heat rather strongly, holding the tube horizontally. Is this base stable at high temperatures?

To 5 cc. of copper sulfate solution add a little sodium hydroxide. Describe the precipitate of copper hydroxide. Now heat the contents of the test tube to boiling. What causes the change in color? (**207**.)

Add sodium hydroxide to a few cubic centimeters of silver nitrate solution. The brown precipitate is silver oxide. Silver hydroxide is so unstable that it cannot be isolated. Notice in these last experiments the relation between stability of the hydroxide and the position of the metal in the activity series.

7. Reaction of a Strong Base with a Non-Metal. Dissolve a crystal of iodine in 5 cc. of sodium hydroxide, heating to complete solution. Two reactions take place.

$$2\ NaOH + I_2 \longrightarrow NaI + NaIO + H_2O.$$
$$3\ NaIO \text{ heated} \longrightarrow NaIO_3 + 2\ NaI.$$

Acidify the solution with acetic acid (litmus test) and add silver nitrate solution. What is the yellow precipitate? The addition of the acetic acid usually causes a yellow color due to the formation of a little hypo-iodous acid which decomposes. What other non-metals react readily with bases? Refer to V, 5, for another illustration of this reaction.

8. Colors of the Insoluble Bases. Many of the bases are characteristically colored, due to the positive metal ion. What evidence is there that hydroxyl ion is colorless? In separate test tubes place 5 cc. of solutions of ferrous and ferric iron, chromium, nickel, and cobalt salts. To each add a little sodium hydroxide and note the color of the precipitate. Shake the tube containing the ferrous hydroxide for a few minutes and note the color change. What happens?

9. Amphoteric Hydroxides. Certain hydroxides are neither predominantly basic nor acidic, but share the properties of both

acids and bases. In separate test tubes place not over 2 cc. each of solutions of a salt of zinc, lead, stannous tin, aluminum, and chromium. To each tube add sodium hydroxide a few drops at a time. Shake or stir the solution well after each addition of sodium hydroxide. What are the precipitates first formed? Continue to add sodium hydroxide a little at a time and account for the result. Now to each solution add slowly some acetic acid until an excess is present. Result? Write equations representing all these reactions.

To 5 cc. of aluminum sulfate solution add ammonium hydroxide until a considerable excess is present. Is aluminum hydroxide readily soluble in ammonium hydroxide?

Take two small portions — less than 0.5 g. — of zinc oxide in separate test tubes. Try to dissolve one portion in sodium hydroxide and the other in dilute hydrochloric acid. Is there such a thing as an *amphoteric oxide?*

10. Mordants. Dyeing. Many metallic hydroxides have the property of *adsorbing* certain materials (IX, 10). This property is especially noticeable in the case of aluminum hydroxide.

Dissolve a gram of alizarin paste in ammonium hydroxide. Divide the solution into two portions and to one add a few cubic centimeters of aluminum sulfate solution, and to the other a little ferrous sulfate solution. Boil each, filter, and try to wash out the dye from the precipitate on the filter paper.

Boil a strip of white cotton cloth in a solution of aluminum sulfate. Wring out the cloth and place it, along with an untreated strip, in an alkaline solution of alizarin. Boil for a minute, then rinse the two strips in cold water. Compare the fastness of the color on the two strips. Methyl orange or ammoniacal cochineal may be substituted for alizarin.

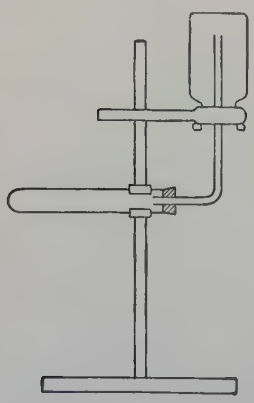

Fig. 8.

Ammonia and Ammonium Hydroxide

11. Preparation of Ammonia. Set up an apparatus as shown in Fig. 8. The bottles in which the ammonia is to be collected must be perfectly dry. Mix 10 g. of ammonium chloride with 10 g. of calcium hydroxide in a mortar and place the mix-

ture in the large pyrex test tube. Heat the test tube gently, starting at the bottom of the tube. Use moist litmus at the mouth of the receiving bottle to determine when the bottle is full, but do not change the receiver for a minute after the test is obtained. Cover the filled bottle with a glass plate and keep it inverted until you are ready to use the gas. Collect two bottles of the gas.

12. Solubility of Ammonia in Water. Ammonia Fountain. Select a rubber stopper which will fit tightly into one of the bottles containing ammonia. Insert through this stopper a glass tube one end of which has been drawn into a jet. This jet should be inside the bottle when the stopper is inserted. If the stopper has two holes, close the second with a glass rod. Wet the stopper copiously and insert it into the bottle of ammonia, having the outer end of the jet tube immersed in a beaker of water. Explain the result. Test the solution in the bottle with litmus. What has been formed?

13. Reaction of Ammonia with Acids. Dip a stirring rod in concentrated hydrochloric acid and bring it near the mouth of the second bottle of ammonia. What causes the cloud of white fumes? This is a convenient method of recognizing ammonia in any quantity.

14. Stability of Ammonium Hydroxide. Smell cautiously of a bottle of ammonium hydroxide. Realize that the odor is that of *ammonia*, not of ammonium hydroxide. A litmus test would show hydroxyl ion, so we may write the following equilibria for ammonium hydroxide in solution.

$$H_2O + NH_3 \rightleftharpoons NH_4OH \rightleftharpoons NH_4^+ + OH^-.$$

15. Precipitation with Ammonium Hydroxide. Ammonium hydroxide is a weak base (in spite of its odor). What does this mean about the concentration of hydroxyl ion in ammonium hydroxide solution? In each of two test tubes place 5 cc. of magnesium chloride solution. To one portion add 10 cc. of ammonium chloride solution. Now add a little ammonium hydroxide to each tube. Explain why magnesium hydroxide is precipitated in one case and not in the other.

16. Ammonia Complexes. You have demonstrated in sections (6) and (8) of this exercise that the hydroxides of copper, nickel, and cobalt are insoluble. Place 5 cc. of solutions of salts of each of these metals in separate test tubes and to each add ammonium

hydroxide drop by drop with shaking until an excess of ammonia is present. Results? Write equations for the reactions in each case. (**206.**)

To 2 cc. of zinc sulfate solution add an excess of ammonium hydroxide. Zinc hydroxide is amphoteric but is not sufficiently acidic in properties to react with a solution of a weak base. Why is zinc hydroxide soluble in ammonium hydroxide?

QUESTIONS.

1. By what methods may the soluble bases be prepared?
2. Which of these methods are of practical importance and what bases are prepared by each?
3. By what general reaction are soluble bases prepared?
4. Why are the reactions of the soluble bases more similar throughout than in the case of acids?
5. What relation is there between stability of bases and activity of the metals?
6. What is meant by an amphoteric hydroxide?
7. What two general methods may be used for the preparation of amphoteric hydroxides?
8. What is the function of a mordant in dyeing?
9. Explain the fact that magnesium hydroxide is precipitated by the addition of sodium hydroxide to magnesium chloride solution, but is not precipitated when ammonium chloride and ammonium hydroxide are added.
10. Explain the failure to obtain a precipitate of the "insoluble" base, copper hydroxide, when ammonium hydroxide is added to a solution of copper sulfate.

EXERCISE XV.

ACIDIMETRY. ALKALIMETRY.

MATERIALS: Calcium hydroxide, sodium carbonate (crystals), sodium hydroxide. *Solutions:* Litmus, methyl orange, phenolphthalein, standard hydrochloric acid (about 0.5 N).

SPECIAL APPARATUS: Burettes, burette stands.

1. Indicators. Indicators are organic substances which show different characteristic colors in acid and in basic solutions. That is, their color is dependent upon the concentration of hydrogen or hydroxyl ion in solution. Some indicators are more sensitive than others; in order to be of value, the color change of an indicator must be sharply marked. Indicators are used in solution, or they may be absorbed on strips of paper (*e.g.*, litmus paper).

Place sodium hydroxide solution in each of the three test tubes. To one solution add a few drops of a dilute solution of phenolphthalein; to the second add methyl orange solution, and to the third add litmus solution. Record the color of each indicator in this basic solution. Now add hydrochloric acid to each of these solutions until a distinct color change is obtained. If the acid is added slowly until the solution is nearly neutral, a single drop of acid will produce a final sharp color change. Note the "acid color" shown by each indicator.

2. Titration. Relative Standard. The object in this experiment is to determine the equivalence, *relative to each other*, of two solutions (a base and an acid) both of unknown strength.

Prepare several hundred cubic centimeters of dilute hydrochloric acid by adding water to the concentrated reagent in the ratio of 10 cc. of the concentrated acid to 190 cc. of water. Make a dilute solution of sodium hydroxide by dissolving 10 g. of the solid base in 400 cc. of water. Stir these solutions thoroughly and label each container.

Obtain two burettes, see that they are perfectly clean, and clamp them firmly in a vertical position on your desk. Rinse one burette with the dilute acid and the other with the dilute sodium hydroxide

solution which you just prepared. This may be done by pouring into the burette (use a funnel) 10–15 cc. of the respective solution in such a manner that the whole of the inside of the tube is rinsed by the solution. Then open the stopcock and allow the solution to drain out into a beaker. The object is to remove any water which may be clinging to the walls of the burette and which would dilute the solutions which you are about to titrate.

Place in one burette a sufficient amount of the hydrochloric acid solution to fill the burette somewhat above the zero mark. Open the stopcock and allow the solution to flow out until the tip of the burette is filled with solution. Notice that the surface of the liquid in the burette is curved. In reading the level, the bottom of this curved *meniscus* is always the level read. Be sure that your eye is on the level of this meniscus as you take the reading. Adjust the level of the solution in the burette to the zero mark. In a similar manner fill the other burette with the sodium hydroxide solution.

Run out about 10 cc. of the acid solution into a clean (but not necessarily dry) beaker. Record the exact amount of solution drawn. Add two or three drops of phenolphthalein solution. Run in sodium hydroxide from the other burette until a faint pink color of the indicator appears and remains after stirring the solution. In case you accidentally add too much alkali, more acid may be drawn and the neutralization repeated. Read both burettes, and record the readings. Divide the number of cubic centimeters of acid by the number of cubic centimeters of alkali. This gives the strength of the sodium hydroxide solution *relative* to the hydrochloric solution. Repeat the titration several times until closely agreeing values are obtained. Average all of these results.

3. Absolute Standard. Normality. Obtain from the side table about 50 cc. of hydrochloric acid, noting the strength (normality) marked on the bottle. Wash the burette which has contained the dilute acid used in (2), rinse it, and fill it with the acid of known strength. Titrate this known solution against your alkali as before, repeating the titration until closely agreeing results are obtained. Calculate (*a*) the strength of your alkali relative to the known acid, and (*b*) the normality of your dilute acid and alkali. Save your solutions for use later.

4. Preparation of Sodium Hydroxide and Determination of Yield by Titration. Stir 10 g. of calcium hydroxide (or oxide) into

100 cc. of boiling water and add 14 g. of crystallized sodium carbonate. Boil and stir for a few minutes. Filter about 5 cc. of the suspension and test the filtrate for the presence of carbonate by adding hydrochloric acid and observing if any effervescence results. If carbonate is present, add more slaked lime and boil again. When the filtrate is found to be free from carbonate, filter the entire solution and wash the precipitate several times with water, adding these washings to the main filtrate. What is the residue on the filter paper?

Measure the volume of this solution containing sodium hydroxide, and place a convenient measured portion of it (say 25 cc.) in a clean beaker. Use your glass graduate for these measurements. To this portion add phenolphthalein solution and from the burette run in enough of your standardized acid to discharge the pink color of the indicator. Now titrate back with standard alkali until the pink color just returns. Determine how much of the standard acid was required to neutralize the sodium hydroxide in the unknown solution, and from your data calculate the weight of sodium hydroxide in the entire unknown solution. Compare this value with the calculated value and compute your percentage error. Point out possible sources of error in your work.

5. Strength of the Reagents. Determine the normality of the dilute acids and bases among your desk reagents by methods similar to those used in the preceding experiments. Since some of these reagents are a great deal stronger than your standard solutions, it will be well to dilute them with several carefully measured volumes of water, then titrate the diluted solution. Your results will then be multiplied by an appropriate factor to obtain the strength of the original reagent. Record all data and calculations in orderly form. Always label data in such a way that they will be intelligible to a person not familiar with the experiment.

QUESTIONS.

1. What are indicators, and how are they used to indicate neutrality?
2. What is meant by a neutral solution? Do indicators usually show the point of exact neutrality?
3. What is the essential reaction of neutralization?
4. What is meant by "titration"? Standard solution?
5. What is the meaning of the following terms: mole, equivalent weight, 1 molar solution, 1 normal solution?

6. Calculate the normality of a sulfuric acid solution of which 45 cc. are required to neutralize 40 cc. of 0.2 N sodium hydroxide. What is the molar strength of this solution?

7. Fifty cc. of a hydrochloric acid solution of unknown strength yield 0.7175 g. of silver chloride. Calculate the normality of the solution.

8. Construct an equilibrium diagram to represent the reaction of calcium hydroxide with sodium carbonate.

9. If an excess of calcium hydroxide is used in experiment 4, will there be any large amount of this base in the solution of sodium hydroxide? Why?

10. What is meant by acidimetry? alkalimetry?

EXERCISE XVI.

SALTS 1. THE HALIDES.

MATERIALS: Ammonium chloride, calcium chloride, calcium fluoride, carbon disulfide, copper wire, glass (powdered), iron (nails), iron (wire), lead dioxide, magnesium chloride, manganese dioxide, mercuric sulfate, phosphoric acid (syrupy), potassium bromide, potassium ferricyanide, potassium iodide, potassium acid sulfate, sodium chloride, sodium nitrite, tin. *Solutions:* Bromine water, calcium chloride, chlorine water, cupric chloride, hydrogen sulfide water, ferric chloride, mercurous nitrate, potassium bromide, potassium iodide, potassium thiocyanate, silver nitrate, sodium fluoride, sodium thiosulfate, stannous chloride.

In XI and XIV certain general characteristics of acids and of bases were studied and it was pointed out that these properties were in each case due to a certain ion. (What ion?) Similarly salts which possess the same negative (acid) ion, or similar ions, show certain similar properties due to this ion, although of course the metal ion will exert its own influence.

1. Chlorides with Oxidizing Agents. In XI the reaction of hydrochloric acid with oxidizing agents was studied. This is really a property of **chloride ion** and all chlorides should behave similarly.

Dissolve 2 g. of sodium chloride in a very little water, add about 0.5 g. of manganese dioxide and 10 cc. of dilute sulfuric acid. Heat this mixture (Hood) and determine what gas is evolved. Repeat the experiment, using calcium chloride in place of common salt. Try also the reaction of ammonium chloride with lead dioxide and dilute sulfuric acid. What common product is obtained in each case? Express all of these reactions by electron equations.

2. Displacement of Bromide and Iodide Ions. To 5 cc. of separate solutions of potassium bromide and iodide add an equal volume of water, and about 2 cc. of carbon disulfide. Add to each about 5 cc. of chlorine water and shake the mixture. After the carbon disulfide has settled, observe the color of the bead which is produced by the dissolved bromine and iodine, respectively, displaced by chlorine. If too much iodide solution was used, the bead

in this tube will not be transparent and will appear black. In this case, repeat the experiment, using much less potassium iodide solution.

Dilute a cubic centimeter of potassium iodide solution with water and add a little bromine water. Shake out with carbon disulfide as above and note the color of the bead. Represent these reactions by electron equations.

From the results of these reactions, arrange the halogens in order of decreasing activity. Remember that the decrease in activity of these non-metals indicates a decrease in their ability to form *negative ions*. Refer to X, 11, and determine where sulfur would be placed in this activity series of non-metals.

3. Relative Ease of Oxidation of the Halides. The displacement reactions which you just carried out indicate that the different halide ions are not oxidized with the same ease. In separate test tubes place a cubic centimeter of a solution of potassium bromide and potassium iodide solution. Dilute largely with water, acidify each with a few drops of dilute sulfuric acid, and add a few crystals of sodium nitrite. Stir, then add carbon disulfide and shake. From the color of the bead, determine which halide is oxidized. What oxidizing agent have you studied which attacks both bromides and iodides but not chlorides? (X, 6; XII, 4.)

4. Reaction of Chlorides with Non-Volatile Acids. In separate test tubes treat about 0.5 g. of sodium, magnesium, and calcium chlorides with 2–3 cc. of concentrated sulfuric acid. Warm if necessary. Test the evolved gas with moist litmus paper. Blow across the mouth of the tube while the reaction is proceeding, and note the fuming caused by the moisture in the breath. What gas is being evolved?

Treat a little sodium chloride with 2–3 cc. of syrupy phosphoric acid, and test the evolved gas in the same manner as above. It may be necessary to apply gentle heat to cause this reaction to proceed. Represent these reactions by equations.

5. Reaction of Bromide and Iodide with Non-Volatile Acids. In X and XIII the behavior of a bromide and an iodide with concentrated sulfuric acid was observed. If these experiments were not performed, they should be carried out now. In any case, write equations representing the reactions and state in words what happens.

Warm separate portions — 0.5 g. — of potassium bromide and

iodide with 3 cc. of syrupy phosphoric acid. Test the gas with litmus. Why does not phosphoric acid react in the same way as concentrated sulfuric acid? Would it be feasible to use phosphoric acid in the preparation of hydriodic acid on a commercial scale? Why?

6. Test for the Halide Ions. In separate test tubes place a few cubic centimeters of a solution of a chloride, bromide, and iodide. Dilute each with water and add a few drops of silver nitrate solution. Note carefully the difference in color of the precipitates obtained. Decant about half of each suspension into clean test tubes. Treat one set of precipitates with dilute nitric acid, and the other set with excess ammonium hydroxide. If the precipitates coagulate into lumps, these should be disintegrated with a stirring rod in order that all of the solid may have a chance to react.

Again precipitate the three silver halides and test their solubility in sodium thiosulfate solution, "hypo." Write equations representing all these reactions. (228.) Record your data in tabular form as shown below. Be sure to note color of precipitates.

	Color	NH_4OH	$Na_2S_2O_3$	HNO_3
AgCl				
AgBr				
AgI				

7. Fluorides. Fluorides differ notably from other halides. The fluoride ion is the most stable ion known and cannot be oxidized by any chemical oxidizing agent. Refer to XI, 7, for the reaction of a fluoride with concentrated sulfuric acid.

To a solution of sodium fluoride add a little nitric acid and a few drops of silver nitrate solution. To another portion add some calcium chloride solution. Results? Refer to the solubility table on p. 460 of your text and compare the solubilities of silver fluoride and calcium fluoride with those of the corresponding chlorides.

8. Test for Fluoride. Grind in a mortar 0.5 g. of calcium fluoride with an equal bulk of potassium acid sulfate and powdered glass. Introduce some of this mixture into an ignition tube about 15 cm. long. Heat the mixture rather slowly, noting the white solid which sublimes and collects on the walls of the tube. Allow

the tube to cool and cut off the lower end of the tube just below the white sublimate. Wash out the tube with water and again heat strongly. The white ring of solid will no longer sublime and will not travel up the tube. This is a rather delicate test for fluorides.

9. Iron with Non-Oxidizing and with Oxidizing Acid. Several metals are capable of forming chlorides in different valences of the metal, depending upon the conditions of the experiment.

Dissolve a small piece of iron wire in dilute hydrochloric acid. To the solution add a few drops of freshly prepared potassium ferricyanide solution. (Prepare this by dissolving a tiny crystal of the solid in half a test tube of water.) The blue precipitate is a test for the ferrous ion. Why was ferrous chloride (and not ferric chloride) formed in this reaction?

Dissolve another bit of iron in aqua regia. Divide the solution into two parts. Test one portion for ferrous ion as above. Result? To the other portion add a few drops of potassium thiocyanate solution. The blood-red color produced by this reagent is a delicate test for the ferric ion. Explain why ferrous chloride was not obtained in this case.

10. Reduction of High-Valence Chlorides. To 10 cc. of copper chloride solution add concentrated hydrochloric acid until the solution becomes quite yellowish. Roll a copper wire into a spiral and drop it into this solution. Boil the solution gently for at least five minutes, then pour some of it into a beaker of water. The white precipitate is cuprous chloride.

Boil 10 cc. of ferric chloride solution for some minutes with an iron nail, and test the resulting solution for the presence of ferrous ion. Heat another portion of ferric chloride solution with a piece of tin and again test for the ferrous ion.

To 5 cc. of ferric chloride solution add an equal volume of hydrogen sulfide water, and repeat the test for ferrous ion. Represent all of these reactions by electron equations.

11. Oxidation of Low-Valence Chlorides. Precipitate a little mercurous chloride by adding a few drops of dilute hydrochloric acid to a cubic centimeter of mercurous nitrate solution. To this precipitate add an excess of chlorine water, and account for the disappearance of the precipitate.

12. Preparation of Mercuric Chloride. Mix a gram of mercuric sulfate with four grams of common salt and place in a dry pyrex

test tube. Heat the lower part of the tube rather strongly until a white solid sublimes and collects on the upper portion of the test tube. This solid is mercuric chloride (*corrosive sublimate*). Scrape out some of the sublimate, dissolve it in a few cubic centimeters of water, and add stannous chloride solution. Account for the results. (**224.**)

QUESTIONS.

1. What is the result of oxidizing a chloride? Write equations to show the reaction of nitric acid with sodium chloride.
2. What two experimental facts indicate that bromine is more active than iodine?
3. What differences are noted in the reaction of sulfuric acid with chlorides, bromides, and iodides?
4. How might you distinguish by chemical test between a chloride, bromide, and iodide in solution?
5. Describe a test for a fluoride.
6. When a metal yields salts in two different valences, what product is always obtained by direct reaction with non-oxidizing acids?
7. What is the effect of mildly reducing cupric chloride, ferric chloride, and mercuric chloride? What substances might be used for this purpose?
8. What would be the result of adding aqua regia to ferrous chloride, cuprous chloride, and stannous chloride?
9. Explain the preparation of mercuric chloride by heating a mixture of sodium chloride and mercuric sulfate.
10. What three reactions are characteristic of all soluble chlorides?

EXERCISE XVII.

SALTS 2. NITRATES. SULFATES. SULFIDES.

MATERIALS: Ammonium chloride, ammonium sulfate, barium nitrate, calcium sulfate, copper sulfate, cupric oxide, ferrous sulfide, lead (granulated), mercuric nitrate, orpiment, plaster of Paris, potassium chloride, potassium sulfate, sodium nitrate, sodium nitrate (crude), sodium nitrite, sand, sphalerite, sulfur, wood charcoal (block), wood charcoal (powdered). *Solutions:* Ammonium sulfide, barium chloride, copper sulfate, ferrous sulfate, hydrogen sulfide water, lead acetate, microcosmic salt, silver nitrate, sodium carbonate, sodium sulfate, stannous chloride.

SPECIAL APPARATUS: Blow pipe, hydrogen sulfide generator, iron crucible (12 cc.), pyrex test tube.

NITRATES. NITRITES.

1. Conversion of Sodium Nitrate into Potassium Nitrate. Dissolve 10 g. of crude sodium nitrate in 20 cc. of hot water. If the resulting solution is not clear, filter out the suspended material. To the filtrate add 8 g. of potassium chloride and evaporate the solution by gentle boiling to just one-half its original volume. Remove the flame and allow the solution to cool for a minute or two until the precipitate settles. What is this precipitate? (**234**.) Decant as much as possible of the clear liquid into a test tube, taking care not to pour off any of the precipitated solid. Let the clear liquid stand some time or cool it under the tap until crystals form. What are these crystals? Notice their characteristic crystalline form. When all the salt appears to have crystallized, filter off the solid and wash it with 2 cc. of cold water. Dissolve a little of the salt in water and test for the presence of a chloride by adding silver nitrate solution. How could this salt be further purified?

2. Effect of Heating Nitrates. Review XII, 14, 15. Heat a gram of barium nitrate in a test tube and determine what visible gas is evolved. Bring a glowing splint to the mouth of the test tube (held horizontally) and try to prove that the visible brown gas is not the only gas given off.

Place a few crystals of mercuric nitrate in an ignition tube about

12 cm. long and heat rather strongly. After some time break the tube by dipping it while still hot into a little water, and shake out the residue. Of what does this residue consist? Does mercuric nitrate decompose in exactly the same way as the nitrates of barium and of lead?

Place about 5 g. of sodium nitrate (or you may use the potassium nitrate prepared in (1)) in a small iron crucible and heat strongly for five minutes. Is there any evidence of decomposition? Let the fused mass cool, stirring it with an iron file to prevent it from forming a solid cake, and remove a small portion of solid to a test tube. Acidify this with dilute sulfuric acid. Compare the effect of adding dilute sulfuric acid to a few crystals of sodium nitrate which have not been heated.

3. Preparation of Sodium Nitrite. If your Bunsen burner was working well, you may have found that some sodium nitrite was obtained during the preceding experiment, but decomposition of the nitrate is slow at this temperature. Add a little granulated lead to the solid remaining in the crucible and again heat for a few moments. After cooling, add to the residue some dilute sulfuric acid and note the brown fumes which are given off. What is the insoluble residue which remains?

4. Nitrates with High-Boiling Acids. Under what conditions would a nitrate react with sulfuric acid? What other acid might be used instead of sulfuric acid? (XII, 1; X, 5.)

5. Heat Decomposition of Ammonium Nitrite. Dissolve a gram each of ammonium chloride and sodium nitrite in 10 cc. of water in a test tube. Warm the solution, noting the evolution of a gas. What is this gas? (**296.**)

6. Test for Nitrate and Nitrite. The evolution of a brown gas when a nitrite is acidified with a dilute acid (3) may be used to identify a nitrite if any considerable amount is present, but the test is not delicate.

Place a very tiny crystal of sodium nitrate in a test tube, add 5 cc. of concentrated sulfuric acid, and shake until the solid dissolves. Incline the tube and slowly pour 10 cc. of a strong cold solution of ferrous sulfate down the side of the tube, preventing the two liquids from mixing so far as is possible. The dark brown ring produced at the junction of the two liquids is a very delicate test for a nitrate.

Repeat this test, substituting dilute sulfuric acid for the concen-

trated acid and decide whether the test is obtained under these conditions.

Now take a very little sodium nitrite in a test tube, dissolve it in a cubic centimeter of water, and add a few drops of *dilute* sulfuric acid. Incline the tube and pour ferrous sulfate solution carefully down the side of the tube as before. Result? State how a small quantity of a nitrite may be distinguished from a nitrate. Write equations for the reactions involved in these tests.

Sulfates.

7. Reduction of Sulfates. Mix several grams of calcium sulfate (plaster of Paris will serve) with about half as much powdered wood charcoal. Heat the mixture for a few minutes in a covered crucible. When cold, add 5 cc. of water, warm to disintegrate the cake, and acidify with dilute hydrochloric acid. Smell the vapors; test them with lead acetate paper.

8. Displacement of a Volatile Anhydride. Mix intimately 2 g. of calcium sulfate with an equal amount of finely ground sand. Place the mixture in a test tube and heat it in the hottest available Bunsen flame. A blast lamp is even better. After some time, bring a moist strip of blue litmus paper to the mouth of the tube. Why does it redden? (**52.**)

Neither this reaction nor the preceding one are specific for sulfates, but both are of importance in the working of sulfate minerals.

9. Conversion of Normal to Acid Sulfate. Weigh 4 g. of potassium sulfate, pulverize it, and place it in a pyrex test tube with 2 cc. (rather carefully measured) of concentrated sulfuric acid. Heat the mixture gently until the solid dissolves. Do not boil the acid. After solution is complete allow the contents of the tube to cool. What is the solid which forms on cooling? How could this be converted again into normal potassium sulfate?

10. Formation of Potassium Pyrosulfate. Transfer the acid sulfate formed in (9) to a porcelain crucible and heat for some time in a medium Bunsen flame. (Hood.) Notice that the acid sulfate at first effervesces vigorously — water is being driven off — and that the effervescence finally stops rather suddenly. Potassium pyrosulfate remains. While the contents of the crucible are still molten, add a pinch of copper oxide. Account for the color produced. If necessary, reheat in order to dissolve all the copper oxide. When the mass has cooled thoroughly, add 10 cc. of water

and warm until the cake is disintegrated. Filter from undissolved copper oxide, if any remains, and observe the color of the solution. What is now in solution? Represent the reactions by equations.

11. Test for the Sulfate Radical. In separate test tubes place very dilute solutions of a sulfate, carbonate, and phosphate. To each tube add a few drops of barium chloride solution. Now acidify each with dilute hydrochloric acid. From these experiments, state how to test for the sulfate ion, and explain the reason for using the specified reagents.

12. Double Sulfates. When certain sulfates are dissolved in the proper proportions in the same solution, they unite to form a *double salt* which crystallizes from the solution on cooling. Pulverize 10 g. of copper sulfate and dissolve it in 20 cc. of hot water. Add to the hot solution one molecular equivalent of ammonium sulfate, stir until this dissolves, and set the solution aside to cool. The crystals which separate have the composition $(NH_4)_2SO_4 \cdot CuSO_4 \cdot 6\ H_2O$. Compare these crystals with crystallized copper sulfate. How do they differ? Dissolve some of this double salt and test the solution for the ammonium ion (XII, 11), cupric ion (VII, 2), and sulfate ion. From the results of these tests, indicate how the double salt ionizes in solution.

13. Plaster of Paris. Mix some plaster of Paris with water to a rather stiff paste. Place a greased coin on a piece of paper and cover it with plaster. Allow it to remain undisturbed until the mass sets. What reaction takes place during the setting? (**241.**)

Sulfides.

14. Sulfides with Acids. In each of three test tubes place a little ferrous sulfide. To one tube add dilute hydrochloric acid (Hood), to the second dilute sulfuric acid, and to the third dilute nitric acid. Smell the evolved gas, or test it with lead acetate paper. Allow the nitric acid to react for some time and note and explain the white substance suspended in the liquid.

Prepare a little copper sulfide and treat portions of the sulfide with dilute hydrochloric and nitric acid, separately. Warm the tubes and decide whether all sulfides react with hydrochloric acid.

15. Polysulfides. To 15 cc. of ammonium sulfide in a test tube add about a gram of powdered sulfur. Warm the tube by dipping it in a beaker of boiling water and stir until most of the sulfur dis-

solves. Note the orange or reddish color of the resulting solution. What does it contain? Save the solution for use in (16).

16. Formation of Sulfo- Salts. Pass hydrogen sulfide through 10 cc. of stannous chloride solution (Hood) until precipitation appears to be complete. What color is stannous sulfide? Filter, scrape the precipitate into a test tube, and add 2–3 cc. of the ammonium polysulfide prepared in (15). Warm the test tube in a bath of boiling water until solution appears to be complete. Filter if the solution is not clear. What is now in solution? To this solution add a few cubic centimeters of dilute hydrochloric acid. Compare the color of the precipitate which forms with that of the original stannous sulfide. What is this second precipitate? Represent the reactions by equations.

17. Roasting Sulfides. Scoop a cavity in a charcoal block, and place in the cavity a small fragment of a sulfide such as sphalerite (ZnS), or orpiment (As_2S_3). Heat the mineral in the oxidizing flame of a blow pipe until little of the original fragment remains. The white coating on the charcoal is zinc oxide or arsenious oxide, respectively. Zinc oxide is yellow when hot. What was the other product of the roasting? (**243.**)

QUESTIONS.

1. Explain the formation of potassium nitrate by a solution reaction between sodium nitrate and potassium chloride.
2. What decomposition products result from the heating of nitrates?
3. What is the result of heating a nitrate with an acid of high-boiling point? Would hydrochloric acid be suitable for this purpose? Why?
4. Explain the reaction of a pyrosulfate with a basic oxide.
5. Account for the setting of plaster of Paris.
6. Explain the difference in the reaction of hydrochloric acid and of nitric acid with ferrous sulfide.
7. What is the effect of adding ammonium polysulfide to stannous sulfide? Explain.
8. Write equations for the reactions involved in the test for nitrates. What is the function of each reagent?
9. By what chemical test may you prove the presence of a sulfate? What is the function of each reagent used in this test?
10. How might you determine, by a chemical test, the presence of a sulfide?

EXERCISE XVIII.

SALTS 3. CARBONATES. SILICATES. PHOSPHATES. ARSENATES. ARSENITES. BORATES.

MATERIALS: Borax, boric acid, marble lumps, methyl alcohol, microcosmic salt, sand, disodium hydrogen phosphate, sodium hydroxide. *Solutions:* Aluminum sulfate, arsenic acid, barium chloride, calcium chloride, cobaltous nitrate, copper sulfate, ferric chloride, limewater, magnesia mixture, microcosmic salt, molybdic acid mixture, nickel sulfate, soap, sodium arsenite, sodium carbonate, silver nitrate, water glass, zinc sulfate.

SPECIAL APPARATUS: Iron crucible (12 cc.).

CARBONATES.

1. Conversion of Carbonate to Bicarbonate. Lead carbon dioxide from a generator into three-fourths of a test tube of limewater. Continue to pass the gas until the first precipitate has completely dissolved. Write equations representing these reactions. At this point, recall that in your carbon dioxide generator you are illustrating a typical reaction of carbonates. What is it?

2. Hard Water. In (1) you have carried out a reaction which is frequently duplicated in nature when natural waters flow over limestone rocks. Divide the solution of calcium bicarbonate into three parts.

(*a*) To one portion add soap solution, a drop at a time, and shake after each addition of soap. Note how much soap solution had to be added before a good lather could be obtained. What is the precipitate in the solution after soap is added? (**255.**) Point out objections to the use of hard water in the household.

(*b*) Add to a second portion a few cubic centimeters of sodium carbonate solution. What is the precipitate in this case? Add soap solution as before, noting the amount required to give a good lather. Did the addition of sodium carbonate soften the water?

(*c*) Heat the third portion of " hard water " to boiling. Account for the precipitate when the solution is heated. Determine whether or not this solution will readily produce a lather when soap solution is added. Water containing dissolved bicarbonate is said to exhibit temporary hardness. Why " temporary "?

3. Basic Carbonates. (*a*) Test a solution of sodium carbonate with litmus. What ion does the litmus test demonstrate to be present in the solution? Draw an equilibrium diagram to account for the presence of this ion.

(*b*) To a few cubic centimeters of a solution of a copper salt add sodium carbonate solution. The precipitate is a *basic carbonate* of copper, whose composition might be represented by the formula $CuCO_3 \cdot Cu(OH)_2$. Many metals whose hydroxides are weak form similar basic salts.

(*c*) To 10 cc. of aluminum sulfate solution add an excess of sodium carbonate solution. Filter, and wash the precipitate thoroughly, using the wash bottle for this purpose. In washing a precipitate, it is not sufficient merely to wash the surface, but the solid should be churned up by the jet from the wash bottle so that all soluble salts may be removed. After washing, pour a few cubic centimeters of dilute hydrochloric acid over the precipitate, watching carefully for effervescence (evidence of carbonate). Is the precipitate a carbonate? Explain.

Silicates.

4. Water Glass. Grind a gram of sand (silica) to a very fine powder. Place this in a small iron crucible with 3–4 g. of solid sodium hydroxide and heat in a Bunsen flame until the sand has all dissolved. Represent the reaction by an equation, keeping in mind the fact that sodium hydroxide was present in considerable excess. Allow the crucible to become fairly cool, then dip the bottom in cold water in order to loosen the fusion cake. Grind the cake in a mortar and dissolve it in water. To this solution add dilute hydrochloric acid in excess. What is the precipitate?

5. Insolubility of Silicates. In separate test tubes place 3–5 cc. of solutions of some salt of barium, zinc, nickel, cobalt, and iron. Take the test tubes to the side table and add a few drops of sodium silicate solution to each. Note the color of the resulting precipitates. Many of our most common minerals are silicates.

Phosphates.

6. Effect of Heating Orthophosphates. (*a*) In a porcelain crucible heat gently about 2 g. of disodium hydrogen phosphate. After the boiling (caused by loss of water) is over, increase the Bunsen flame and heat strongly for five minutes. The residue is

sodium pyrophosphate. Write an equation for the reaction. Allow the crucible to become quite cold, then dissolve the residue in cold water. Label the solution and set it aside for use in (7).

(*b*) In a similar manner, heat microcosmic salt. Hold a wet strip of red litmus paper in the escaping gas. What substance do you recognize as a product of this decomposition? Write an equation for the reaction. Dissolve this residue in cold water, label the solution, and set it aside for (7).

7. Tests for the Different Phosphate Ions. Test small portions of solutions of microcosmic salt (an orthophosphate), sodium pyrophosphate, and sodium metaphosphate by adding a few drops of solutions of silver nitrate, calcium chloride, and ammonium molybdate ("molybdic acid mixture") to each of the respective solutions. Note the color and physical appearance of all precipitates obtained, and record the data in a table as indicated below.

	PO_4^{---}	$P_2O_7^{----}$	PO_3^-
$AgNO_3$			
$CaCl_2$			
$(NH_4)_2MoO_4$			

8. Phosphate Bead Test. Hold a small loop of copper wire in the upper part of the Bunsen flame until it is well coated with an oxide layer. Note the appearance of the wire when cold. Dip the hot wire into a little microcosmic salt on a watch glass, and again heat. Note how the salt boils and finally melts to a clear glass. After some time remove the wire and note the color of the phosphate bead, and the absence of the oxide coating on the wire. Write equations to account for the changes noted. (**263.**) Certain other metals yield characteristically colored beads so that their presence may be tested for in this way.

Arsenates. Arsenites.

9. Test for Arsenate. Arsenates closely resemble phosphates in their reactions. To a solution of an arsenate (or arsenic acid) add ammonium hydroxide until the solution is strongly alkaline, then a few cubic centimeters of "magnesia mixture" (essentially a solution of magnesium chloride and ammonium chloride). The white precipitate formed is the usual test for the arsenate ion. Determine whether an orthophosphate will give a similar precipi-

tate with this reagent. Could you test for both of these substances in the same solution?

10. Scheele's Green. To a few cubic centimeters of a solution of sodium arsenite add copper sulfate solution. The peculiar green precipitate has the formula $CuHAsO_3$. This substance was formerly much used for coloring wall papers. Mention objections to its use for this purpose.

Borates.

11. Borax Bead Tests. Clean a nichrome wire by dipping it in hydrochloric acid and holding it in a Bunsen flame. Make a small loop in the end of the wire, heat the wire, and while hot dip the loop into a little powdered borax on a watch glass. Heat the borax which adheres to the wire until it melts to a clear glass bead. Bring the hot bead in contact with a minute fragment of a copper salt, and reheat strongly in the oxidizing flame. Note the color of the cool bead. Repeat using a cobalt salt. Represent the reactions by equations. (**264.**)

12. Hydrolysis of Borax. Test a solution of borax with litmus paper or phenolphthalein solution. Draw an equilibrium diagram to account for the result. Suggest uses for borax depending on the alkalinity of the solution.

13. Test for Borates. Dissolve 0.5 g. of boric acid in a small quantity of methyl alcohol. Transfer the solution to a porcelain dish and set fire to the alcohol. Methyl borate forms, and when burned, imparts a characteristic color to the flame.

QUESTIONS.

1. Represent by equations the conversion of carbonates into bicarbonates.
2. Hardness in water is produced by the presence of what salts?
3. Represent by equations two methods of converting bicarbonates into carbonates.
4. What would be the effect of adding sodium carbonate solution to solutions of ferric and chromic chloride? Explain.
5. What two methods may be used for the formation of silicates?
6. What is the effect of heating normal sodium orthophosphate with silicon dioxide? sodium carbonate with silicon dioxide?
7. Explain the fact that fused metaphosphates react with basic oxides.
8. What difference is noted in the thermal decomposition of acid phosphates, acid sulfates, and acid carbonates?
9. Explain the conversion of calcium bicarbonate into calcium carbonate by the addition of solutions of sodium carbonate, sodium phosphate, and borax.
10. What tests distinguish the following ions: carbonate, phosphate, arsenate, borate?

EXERCISE XIX.

EQUILIBRIUM IN SOLUTION.

MATERIALS: Barite, barium chloride, ferrous sulfide, sodium acetate (cryst.), sodium carbonate. *Solutions:* Acetic acid, ammonium acetate (6 N), ammonium chloride, ammonium oxalate, barium chloride, cadmium sulfate, calcium chloride, copper sulfate, hydrogen sulfide water, lead acetate, lead nitrate, magnesium chloride, mercuric chloride, mercuric nitrate, methyl orange, microcosmic salt, potassium bromide, potassium chromate, potassium dichromate, potassium iodide, silver nitrate, zinc sulfate.

SPECIAL APPARATUS: Pyrex test tube (60 cc.).

1. Solubility. Significance of the Term. According to the general rules for the solubility of salts (**217**), lead chloride is insoluble in cold water. To 5 cc. of lead acetate solution add an equal volume of water and then dilute hydrochloric acid drop by drop until no further precipitate is noted. Remove this "insoluble" precipitate by filtration and to the filtrate add a drop of potassium chromate solution. What is the yellow precipitate? Is lead chloride absolutely insoluble? Is any compound absolutely insoluble? Consult p. 94 of the text for the true significance of the terms soluble and insoluble and keep this significance in mind when explaining the various phenomena in the succeeding experiments.

2. Solubility Product. Precipitation Conditions. Define the term "solubility product." In terms of solubility product, state what conditions must be brought about in order to precipitate any given substance. Dilute 1–2 cc. of barium chloride solution with 20 volumes of water and add a little dilute sulfuric acid. Result? Similarly, dilute 1–2 cc. of calcium chloride solution (this solution is the same strength as the barium chloride) and add sulfuric acid. Result? From these observations, what is the relative magnitude of the solubility products of barium and calcium sulfates? How would these values compare with that for sodium chloride, which is soluble to the extent of 35 g. per 100 cc. of water at 20°?

3. Precipitation of Soluble Salts. According to the usual solubility statements, barium chloride is a soluble salt (37 g. dissolves

in 100 cc. of water at 20°). Prepare a strong solution of barium chloride by shaking 5 g. of the salt with half a test tube of cold water and filtering from undissolved residue. To this solution add about 10 cc. of concentrated hydrochloric acid. Write ionic equilibria to show why the addition of hydrochloric acid produced a precipitate. Was any barium chloride left in solution after adding hydrochloric acid? *Prove* your answer. This experiment shows that the solubility " rule " is only a general statement and makes no mention of any special conditions.

4. Solution Conditions. Selecting suitable reagents, prepare a little barium chromate, calcium oxalate, and lead phosphate. These substances are " insoluble " in neutral solutions. Indicate the reaction of the above three pairs of reagents by the use of equilibrium diagrams. From your observations in (3), state how the addition of an excess of either reagent should affect the solubility of the precipitated salts. This is a valuable principle in quantitative analysis.

To each of the precipitates just prepared, add dilute nitric acid. Equations? *In general,* salts of weak acids dissolve in strong acids. Write equilibria to show why this should be the case. State, in terms of solubility product, what conditions must be brought about in order to cause a given substance to dissolve.

Prepare a small amount of lead sulfate by adding dilute sulfuric acid to 10 cc. of a solution of lead nitrate. Allow the precipitate to settle and decant most of the liquid. To the solid residue add a few cubic centimeters of strong ammonium acetate solution. Lead acetate is, contrary to expectation, a poorly ionized salt. Construct an equilibrium diagram representing the reaction of lead sulfate with ammonium acetate solution.

5. Ionization of Mercury Salts. To 5 cc. of solutions of mercuric chloride and mercuric nitrate, add a few drops of potassium dichromate solution. Mercuric dichromate is insoluble in the ordinary sense. Why was a precipitate formed in one case and not in the other?

6. Formation of Complex Salts. To 10 cc. of mercuric chloride solution add potassium iodide solution drop by drop. What is the first precipitate? Continue to add potassium iodide until the precipitate disappears.

$$2\ KI + HgI_2 \longrightarrow K_2HgI_4.$$

The soluble potassium mercuric iodide is called a *complex salt.* It ionizes

$$K_2HgI_4 \longrightarrow 2\ K^+ + HgI_4^{--}$$

instead of into all the ions from which it was formed. Write equilibria to indicate why mercuric iodide dissolves in potassium iodide. Note that this reaction is an exception to the general statement formulated in (4) regarding the effect of excess reagent. Such exceptions are not infrequent.

7. Ammonia Complexes. Ammonia forms complex ions with a number of metals and most of these complex substances are soluble. Prepare a little silver phosphate and divide the liquid containing the precipitate into two parts. To one add ammonium hydroxide. Write equilibria to show why the salt dissolves. To the second portion add nitric acid. Explain this reaction on the basis of (4).

To 5 cc. of copper sulfate solution add ammonium hydroxide drop by drop until the first precipitate dissolves. Account for the deep blue color of the resulting solution.

8. Comparison of the Solubility Products of the Silver Halides. Place 2 cc. of silver nitrate solution in each of three test tubes. Add, respectively, a few cubic centimeters of a solution of a chloride, a bromide, and an iodide. Allow the precipitate to settle and decant as much as possible of the supernatant liquid. To each precipitate add ammonium hydroxide. Result?

To the ammoniacal solutions of silver chloride and silver bromide, add a few drops of potassium iodide solution. What is the yellowish precipitate? From the evidence obtained in these experiments, arrange the silver halides in the order of their decreasing solubility products.

9. Repression of the Ionization of a Weak Base. In separate test tubes take 5 cc. of magnesium chloride solution. To one tube add 10 cc. of ammonium chloride solution. Now add ammonium hydroxide to each solution. Explain why a precipitate of magnesium hydroxide is obtained in one case and not in the other. To the test tube in which no precipitate was obtained, add sodium hydroxide. Explain why sodium hydroxide will precipitate magnesium hydroxide regardless of the presence of ammonium salts.

10. Repression of the Ionization of a Weak Acid. To 10 cc. of water add several drops of acetic acid. Divide the solution into two portions. In a third test tube place a little sodium hydroxide.

To each of the three test tubes add the same amount (not over three drops) of methyl orange solution. This is an indicator which is pink in the presence of a good deal of hydrogen ion and yellow in solutions containing little or no hydrogen ion. To *one* of the test tubes containing acetic acid add 2 g. of crystallized sodium acetate and stir. Compare the resulting indicator color with the two remaining tubes. Is this solution still acid? Prove your answer by testing with litmus, which is more sensitive to hydrogen ion than is methyl orange. Write ionic equilibria to account for the change involved.

11. Precipitation with Hydrogen Sulfide. To 2 cc. of cadmium sulfate solution add an equal volume of dilute hydrochloric acid. Add a *few drops* of hydrogen sulfide water. Result? Now dilute this solution with 10–15 cc. of water, stir well, and add a little more hydrogen sulfide water, if necessary. Explain why cadmium sulfide did not precipitate until the solution was diluted. (**275.**)

Mix 5 cc. of solutions of copper and zinc sulfates. Add a few drops of dilute hydrochloric acid and pass hydrogen sulfide into the solution for a minute with stirring. (Hood.) Filter the copper sulfide and make the filtrate (which is saturated with hydrogen sulfide) alkaline with ammonium hydroxide. The white precipitate is zinc sulfide. Explain why this was not precipitated when hydrogen sulfide was passed into the acidified solution.

12. Conversion of Barium Sulfate to Carbonate. Grind a gram of barite (natural barium sulfate) to a very fine powder. Boil this in a large pyrex test tube for ten or fifteen minutes with 5 g. of sodium carbonate and 20 cc. of water. Filter, and wash the residue until the washings fail to effervesce (absence of soluble carbonate) when acidified with hydrochloric acid. Add a few drops of concentrated hydrochloric acid to the residue on the filter paper. Effervescence proves that some barium sulfate has been converted into the carbonate, in spite of the fact that the latter substance is considerably *more* soluble than the sulfate. Explain how this could occur. (More than three times the reacting quantity of sodium carbonate was used.)

QUESTIONS.

1. What is the magnitude of solubility product of "insoluble salts"? Are all of the numerical values of such salts of the same magnitude?
2. What is the magnitude of solubility product of "soluble" salts?

3. Write expressions for the solubility product of lead chromate, ferric chloride, acetic acid, magnesium hydroxide.

4. Show by ionic equilibria why barium sulfate will not dissolve in any reasonable quantity of hydrochloric acid.

5. Why does lead sulfate dissolve readily in ammonium acetate solution?

6. How could you demonstrate that in the copper ammonia complexes the ammonia is attached to the copper and not to the negative radical?

7. If hydrogen sulfide were passed into an alkaline solution containing copper and zinc sulfates, what would be the result?

8. In terms of solubility product, explain why silver chloride dissolves when an excess of ammonium hydroxide is added, and is reprecipitated when the solution is acidified with nitric acid.

9. In terms of solubility product, explain why ammonium hydroxide causes the precipitation of aluminum hydroxide in the presence of ammonium chloride, but does not cause the precipitation of magnesium hydroxide under these conditions.

10. In terms of solubility product, what must be done in order to dissolve a slightly soluble substance?

EXERCISE XX.

NON-METALS 1. THE HALOGENS.

MATERIALS: Calcium hydroxide, carbon disulfide, colored cloth, ferrous sulfate, iodine, magnesium (powder), manganese dioxide, potassium bromide, potassium chloride, potassium iodide, starch, steel wool, turpentine. *Solutions:* Bromine water, chlorine water, hydrogen sulfide water, manganese sulfate, potassium bromide, potassium chloride, potassium dichromate, potassium iodide, silver nitrate, sodium hypochlorite, stannous chloride.

1. Preparation of Chlorine.[1] Clamp a flask of at least 500 cc. capacity on a ring of the lamp stand. Fit the flask with a two-hole stopper carrying a thistle tube extending nearly to the bottom of the flask, and a suitably bent delivery tube reaching almost to the desk level. Be sure that all connections are tight. Have the apparatus inspected before proceeding with the experiment. Chlorine is poisonous. Put 50 g. of manganese dioxide (pyrolusite) in the large flask and add 25 cc. of water and 100 cc. of concentrated hydrochloric acid. More acid will need to be added later. Place a dry bottle under the delivery tube. The bottle should be covered with a piece of cardboard through which the delivery tube passes. Why should the delivery tube extend nearly to the bottom of the bottle? *Warm* the generator with a very low flame until chlorine is given off freely. Remove the burner, and heat again only as required to keep up a regular evolution of the gas. If the flask is heated too hot, hydrochloric acid will distil over. As soon as one bottle is filled with chlorine — the yellow color of the gas may be seen throughout the bottle — remove it, cover with a glass plate, and substitute a second bottle. Collect three bottles of gas, and then at once commence section (5), the performance of which requires some time. While preparing the materials for that experiment, pass the gas from the generator into a bottle of water. *Do not permit any chlorine to escape into the room.*

2. Reaction of Chlorine with a Metal. Holding a small piece of steel wool in the tongs, heat it to redness and plunge it at once

[1] It may be found advisable to have students work in pairs on the first six sections of this exercise.

into a jar of chlorine. Describe the result. What compound is formed?

3. Reaction of Chlorine with Hydrogen. Connect a small glass jet by a rubber tube to a gas cock and light the jet. (Use only a small flame.) Lower the burning jet into a jar of chlorine for a moment. Add a few cubic centimeters of water to the jar, shake, and test the solution with a few drops of silver nitrate solution. Hydrogen is a component of illuminating gas. What compound forms when the gas jet burns in an atmosphere of chlorine?

4. Reaction of Chlorine with a Hydrocarbon. Wet a filter paper with a little turpentine and thrust the paper into the third jar of chlorine. What is the black deposit? Hold a moist strip of blue litmus in the jar. What other compound is formed in this reaction?

5. Reaction of Chlorine with a Hot Base. Suspend 22 g. of calcium hydroxide in 50 cc. of boiling water, and add 9 g. of potassium chloride. Allow chlorine from the generator to pass into this suspension until the liquid is saturated with the gas. The reaction will be greatly aided if the flask is shaken occasionally. Nearly all of the solid should dissolve during the reaction. When the solution is saturated, remove the flask and boil the solution gently for 20 minutes. A very low flame should be used at first, as the liquid has a tendency to froth. Filter through a large folded filter and set the filtrate aside to cool. What is the compound which crystallizes? What substance remains in solution? Write equations for the reactions taking place during this experiment. (**291**, **293**.)

6. Reaction of Chlorine with a Cold Base. Allow chlorine to pass into 10 cc. of sodium hydroxide for 5 minutes. Add a little of this solution to 1 cc. of manganese sulfate solution, dilute to a volume of 10 cc., and warm for a moment. The dark precipitate is manganese dioxide. Write equations for these reactions.

When this experiment has been completed, open the generator in the hood, pour the liquid into the jar provided, and wash the flask in the hood.

7. Reaction of Chlorine with Water. Smell (*caution*) of a bottle of chlorine water. Test it with both colors of litmus, noting all changes. Soak some colored paper or cloth in chlorine water. What causes the bleaching? Give any evidence you can to show that chlorine water contains free chlorine as well as hypochlorous acid.

8. Reaction of Chlorine with Bromides and Iodides. In separate test tubes place a *few drops* of potassium bromide and potassium iodide solutions, and in a third tube take a mixture of about equal amounts of the two solutions. Dilute largely and add 1–2 cc. of chlorine water to both. (Electron equation.) Add a little carbon disulfide to each tube and shake. **Caution**: *Carbon disulfide is very inflammable.* Note the color of the carbon disulfide bead by transmitted light after settling. The color of dissolved iodine is so strong that a very little will mask a good deal of bromine. If too much of the bromide or iodide salts is taken, the bead will appear black. In such a case, repeat, using much less of the halide solution. Keep these beads for comparison with those formed in later experiments. Remember also that chlorine imparts a pale yellow color to carbon disulfide, but the bead is not at all red as in the case of bromine. A chlorine bead may be obtained by acidifying a little sodium hypochlorite solution and shaking out with carbon disulfide.

9. A Test for Iodine. The color produced by iodine dissolved in carbon disulfide is very often used as a test for this halogen, but the following reaction affords an even more delicate means of detection. Prepare some starch " solution " by mixing 0.5 g. of starch with enough water to make a thin paste and then pouring this paste into 75 cc. of boiling water.

Dilute 5 cc. of potassium iodide solution to 100 cc. and to three portions of this diluted solution add a few cubic centimeters of starch solution. To one test tube add chlorine water, to a second, bromine water, and to the third, a few drops of dilute nitric acid. The blue color is caused by the reaction of *free* iodine with starch.

Optional. If time permits, take 1 cc. of potassium iodide solution and dilute with successive measured portions of water until a small portion of the dilute solution fails to respond to the starch test when chlorine water is added. To this last portion (where the ordinary test failed) add a crystal of ferrous sulfate. Result? The original iodide solution was 1 N. Calculate the concentration of iodine in milligrams per cubic centimeter in the most dilute solution in which you obtained the test. Would you consider this test delicate?

10. Selective Oxidation of Bromides and Iodides. In XIII you found that concentrated sulfuric acid would oxidize hydriodic and hydrobromic acids, but not hydrochloric acid. By a proper

selection of oxidizing agents, hydriodic acid may be oxidized without attacking hydrobromic acid.

In separate test tubes place a few drops of potassium bromide and iodide solutions. To each add 5 cc. of dilute sulfuric acid and the same amount of potassium dichromate solution. Add a little carbon disulfide and shake. Note carefully the color of the carbon disulfide beads and compare them with the ones you obtained in (8). Write an equation for the reaction which occurred. (*Note:* Hot, strongly concentrated potassium dichromate solution will liberate bromine, but in any case less rapidly than iodine.)

11. Test for Bromide in Presence of Iodide. In (8) you found that both bromine and iodine give characteristic colors when dissolved in carbon disulfide, but that iodine obscures the color of bromine. Since both halogens are frequently present together it is necessary to remove iodine before we can test for bromine. (Why not use the silver nitrate test?)

In separate test tubes place small amounts of a bromide and an iodide solution. To each add about 1 cc. of dilute sulfuric acid and an excess of sodium hypochlorite solution (10–12 cc.). Add carbon disulfide and shake. Clear or faintly yellow beads should be obtained. In this reaction, the active oxidizer, hydrochlorous acid (how was it formed), oxidizes the iodine and bromine first to the zero state, as shown by the first color in the solutions, and then to the 5^+ valence. Write electron equations for these changes.

Now take a mixture of equal amounts — not over five drops each — of solutions of a bromide and an iodide, acidify as before, and add carbon disulfide. Dilute some sodium hypochlorite reagent with at least an equal amount of water and add this diluted solution *drop by drop* to the iodide-bromide mixture, shaking well after each few drops. Note the first color of the bead and the change which it undergoes. If you add too much sodium hypochlorite solution and destroy all color, repeat the experiment. Explain what happens during this reaction. Refer to (10).

12. Detection of Chloride in Presence of Bromide and Iodide. Prepare a mixture of a *few drops* each of solutions of a chloride, bromide, and iodide, acidify with dilute nitric acid, and dilute to 10 cc. with water. Add silver nitrate solution a drop at a time, shaking and allowing the precipitate to settle after each addition. With a little care, the silver nitrate solution may be added slowly enough to precipitate first the colored silver iodide and bromide,

and finally the pure white silver chloride, which is easily seen because of the contrasting color. Why is silver chloride the last to precipitate? Cf. XIX, 8.

The following method of detection is more rapid. Prepare a mixture of the three halide solutions, dilute somewhat, acidify with a few drops of nitric acid, and add silver nitrate solution to slight excess. Filter the solution. Dilute 5 cc. of ammonium hydroxide with 5 volumes of water and pour a little of this dilute solution over the precipitate on the filter. Catch the filtrate in a clean test tube and pour it back over the precipitate several times. Finally acidify the filtrate with dilute nitric acid. White silver chloride will precipitate. This separation is based on the fact that silver iodide is insoluble, and silver bromide difficultly soluble, in dilute ammonium hydroxide, while silver chloride dissolves readily in this reagent. Why?

13. Preparation of Bromine. *Caution: Take great care not to inhale bromine vapor. It is very corrosive.* Grind about 4 g. of potassium bromide in a mortar and add about 2 g. of manganese dioxide. Transfer this mixture to the glass retort, and arrange this retort in the same manner as in the preparation of nitric acid. (Ex. XII.) To 10 cc. of water add 6 cc. of concentrated sulfuric acid, cool, and by means of a funnel introduce this into the retort. Warm the retort gently until a few drops of bromine have distilled over and collected in the receiver. After the retort has cooled, wash it in the hood. Represent the reaction by an electron equation.

Add 20 cc. of water to the test tube containing the bromine and stir until most of the halogen dissolves. Use this water solution of bromine in the following sections.

14. Reactions of Bromine. (*a*) Mix equal volumes of bromine water and hydrogen sulfide water. Write an equation to account for the formation of the white precipitate.

(*b*) To 10 cc. of bromine water add stannous chloride solution until the color of the bromine water fades. What compound is now in solution? In both of these reactions, was the bromine oxidized or reduced?

15. Iodine. Iodine may be prepared in much the same manner as that used for bromine and chlorine. Pulverize 2 g. of potassium iodide and mix the salt with an equal bulk of manganese dioxide. Place the mixture in a porcelain crucible on a wire gauze supported

on a ring of the lamp stand. Moisten the contents of the crucible with water and add 3 or 4 drops of concentrated sulfuric acid. Cover the crucible with a watch glass on which has been placed a few cubic centimeters of water to keep it cool. Warm the crucible with a very small flame until the watch glass becomes coated with crystals of iodine.

16. Reactions of Iodine. (*a*) Scrape some of the iodine from the watch glass and dissolve the solid in a little potassium iodide solution. The brown color is caused by the molecular compound $KI \cdot I_2$.

(*b*) In a wet porcelain crucible place several small crystals of iodine. Cover the iodine with a little powdered magnesium and let the mixture stand. Note any evidence of reaction.

QUESTIONS.

1. What is the purpose of each reagent used in the preparation of chlorine?
2. With what classes of compounds have your experiments shown chlorine to react?
3. What difference was noted in the reaction of chlorine with a cold base and with a hot base?
4. What is the result of heating a hypochlorite in solution?
5. Explain the precipitation of potassium chlorate in experiment 5.
6. Arrange the halogens in order of decreasing activity, and cite evidence to show why this order is correct. How does this order compare with arrangement in order of atomic weights?
7. What change in chemical conduct is noted in a family of closely related non-metals?
8. In terms of solubility product, explain why silver chloride is the last to precipitate when silver nitrate solution is added to a solution containing a chloride, a bromide, and an iodide.
9. In terms of solubility product, explain why silver chloride is the first to dissolve when dilute ammonium hydroxide is added to a mixture of the chloride, bromide, and iodide of silver.
10. In what respect do the reactions of bromine and iodine differ from those of chlorine?

EXERCISE XXI.

NON-METALS 2. NITROGEN. SULFUR. THE PHOSPHORUS FAMILY. SILICON.

MATERIALS: Ammonium chloride, antimony, arsenic, arsenic trioxide, bismuth carbonate (basic), carbon disulfide, charcoal (powdered), copper wire, cotton (absorbent), ferrous sulfide, iron wire, magnesium (powdered), phosphorus (red), sand, silver nitrate, sodium nitrite, sulfur (flowers), sulfur (roll), sulfur dioxide (cylinder), zinc. *Solutions:* Antimony trichloride, magnesia mixture, pyrogallic acid (10%), sodium arsenite, sodium hydroxide (50%), stannous chloride.

SPECIAL APPARATUS: Narrow neck bottle (300 cc.), screw pinch cock.

NITROGEN.

1. Preparation of Nitrogen. In a small flask place about 4 g. of ammonium chloride and 6 g. of sodium nitrite. Provide the flask with a one-hole rubber stopper carrying a bent delivery tube and clamp the flask in place over a wire gauze on a ring of the lamp stand. Arrange to collect a gas over water. Add 25 cc. of water to the flask and warm very gently. Collect a bottle of the gas and satisfy yourself that it will neither burn nor support combustion. Note that one atom of each molecule of nitrogen formed comes from the negative (nitrite) radical, and the other from the positive (ammonium) radical, of the ammonium nitrite first formed. Write an electron equation showing which nitrogen atom is oxidized and which reduced. A reaction of this type is known as compensation *auto* oxidation-reduction.

2. Per Cent (approximate) of Nitrogen in the Air. Fit a bottle of 250–300 cc. capacity with a tightly fitting one-hole rubber stopper. Insert a short glass tube until one end is flush with the bottom of the stopper. To the other end of the tube attach a short piece of rubber tubing, provided with a screw pinch cock. If the rubber tube does not fit the glass tube tightly, it must be wired in place. Fill the bottle completely with water, loosen the pinch cock, and push the stopper into the neck of the bottle as far as it will readily go; close the pinch cock, remove the stopper, and measure the volume of water in the bottle by pouring it into a glass graduate.

Fill a pneumatic trough, using enough hot water to bring the temperature of the water to that of the room. Measure carefully 15 cc. of pyrogallic acid solution and 30 cc. of a 50% solution of sodium hydroxide. Pour these solutions into the bottle and *immediately* stopper the bottle and close the pinch cock. Put the neck of the bottle under water in the water pan and keep it under water until the experiment is finished. Why? Shake the bottle at frequent intervals for 15–20 minutes. Alkaline pyrogallic acid greedily absorbs oxygen, leaving the remaining components of the air unchanged. After the reaction is over, turn the bottle on its side, keeping the rubber tube constantly under water, loosen the pinch cock, and let water flow into the bottle to replace oxygen absorbed. When no more water enters, remove the bottle and measure carefully the volume of liquid which it now contains.

The volume of air taken equals the original volume of the bottle minus 45 cc. (the volume of reagents used). The volume of oxygen absorbed equals the final volume of liquid minus 45 cc. Calculate the per cent of nitrogen in air.

Sulfur.

3. Forms of Sulfur. Dissolve about a gram of powdered sulfur in a few cubic centimeters of carbon disulfide. Let the solvent evaporate in a narrow test tube — away from flames — and observe the crystal form of the residue.

Melt about 5 g. of roll sulfur in a test tube and pour the liquid on to a dry filter paper supported in a funnel. As soon as a few crystals form on the surface of the liquid, lift out the paper and pour away the liquid sulfur. Compare the crystals thus obtained with the previous crystals from carbon disulfide. Sketch each type of crystal.

In the same test tube just used, melt a few grams of roll sulfur, taking care to heat the tube slowly and evenly. When the sulfur melts to a straw-colored liquid, pour a few drops into a beaker of cold water. Compare the resulting solid with the original sulfur. Heat the remainder of the sulfur more strongly, noting all the changes which occur. When the liquid almost boils, pour it into cold water. Examine the residue of *plastic* sulfur. If you like, chew some of it. What happens? Set the rest aside until the next exercise and again examine it. What changes do you notice?

4. Union of Sulfur with Metals. Place a little powdered sulfur in an ignition tube and insert a copper and an iron wire. The ends of the wires should be bent over so that the wires will not slide into the tube and come in contact with the sulfur. Heat the upper part of this tube first, and then slowly heat the lower end so that some of the sulfur will distill on to the heated metals. Remove the wires and examine them. Make note of any changes you can observe.

5. Formation of Sulfur from Sulfur Compounds. In a bottle place a few lumps of ferrous sulfide and add 10 cc. of dilute hydrochloric acid. (Hood.) From a cylinder of the compressed gas draw a bottle of sulfur dioxide and invert this over the first bottle. The white deposit which forms is sulfur. Write an electron equation for this reaction. Deposits of sulfur around volcanoes are thought to have been formed in this way.

The Phosphorus Family.

6. Allotropic Forms of Phosphorus. Moisten a little red phosphorus with water and test with litmus paper. The acid reaction is caused by phosphorous acid formed by slow oxidation of the phosphorus.

Heat a little red phosphorus in an ignition tube at least 15 cm. long, until the red form is largely converted into the yellow modification. Note the droplets on the cooler portion of the tube. The gas which burns at the end of the tube during the heating is phosphine, formed from the phosphorous acid. Represent this reaction by an electron equation.

Break the hot tube containing the yellow phosphorus in a dish of water and pour away most of the water, leaving the residue partly exposed. After some time, test the water with litmus. What does the solution contain?

7. Forms of Arsenic. In an ignition tube 15 cm. in length, place arsenic trioxide to a depth of 1–2 cm., and above this put a layer of powdered charcoal to the same depth. Heat the tube slowly, first getting the charcoal hot, and then slowly subliming the arsenious oxide on to the heated carbon. Arsenic is formed and deposits as a mirror on the cooler portions of the tube. If the heating is carefully carried out, a narrow ring of yellow arsenic will also be obtained. In which of these forms does arsenic commonly exist? This reaction illustrates also one of the most important reactions of carbon, *e.g.*, its reducing power.

8. Arsine. Place a pinch of arsenious oxide (or any other arsenic compound) in a test tube, add about a gram of zinc and a little dilute sulfuric acid. (Hood.) Insert a loose wad of cotton near the mouth of the tube to remove droplets of spray. Cover the tube with a filter paper cap and place on this cap a tiny crystal of silver nitrate. Arsine is formed, which first turns the silver nitrate yellow, and then black, as the moisture in the gas reacts with the yellow compound.

$$6\ AgNO_3 + AsH_3 \longrightarrow AsAg_3 \cdot 3\ AgNO_3 + 3\ HNO_3.$$
$$AsAg_3 \cdot 3\ AgNO_3 + 3\ H_2O \longrightarrow 6\ Ag + 3\ HNO_3 + H_3AsO_3.$$

9. Marsh Test. *Optional.* Set up a hydrogen generator (Hood), using zinc and dilute sulfuric acid as the source of hydrogen (V). Provide the generator with a jet delivery tube. After the generator has been in operation for some time, have the assistant test the gas, and if the test shows that all the air is displaced, wrap a towel around the generator and light the gas. Pour down the thistle tube a few drops of a solution of any arsenic compound and after a moment note the change in the appearance of the burning hydrogen jet. Hold a clean dry porcelain dish in the flame for a moment and note the black stain of metallic arsenic which forms. This reaction affords an extremely delicate test for arsenic. Represent the reaction for the formation of arsine by an electron equation.

Clean the generator thoroughly and carry out a similar test, substituting an antimony compound in place of the arsenic compound used before. Describe the result of this test.

10. Reduction of Arsenious Acid. Warm 0.5 g. of arsenious oxide with 10 cc. of dilute hydrochloric acid, and filter from undissolved residue. To the filtrate add an equal volume of stannous chloride solution and set the test tube aside for some time. The black deposit which forms is arsenic. Represent the reaction by an electron equation.

11. Behavior of the Phosphorus Family with Nitric Acid. (*a*) Warm a very little red phosphorus with a few cubic centimeters of dilute nitric acid, until most of the phosphorus dissolves. Dilute with an equal volume of water and filter any undissolved residue. Make the filtrate alkaline (litmus) with ammonium hydroxide and add 5 cc. of "magnesia mixture." The characteristic white precipitate is (in the absence of arsenates) a test for the

phosphate ion. Write an equation representing the action of nitric acid with phosphorus.

(*b*) Treat a few fragments of arsenic in exactly the same manner. If dilute nitric acid does not seem to react readily, add a few drops of the concentrated acid. The white precipitate obtained on adding " magnesia mixture " is, in the absence of phosphates, a delicate test for the arsenate radical.

(*c*) In a test tube boil a few fragments of antimony with 5 cc. of concentrated nitric acid. In this case, antimony is oxidized to antimonic acid, which is insoluble and separates as a white precipitate. Note the increasing difficulty with which these non-metals are oxidized.

(*d*) Dissolve a pinch of basic bismuth carbonate in a few cubic centimeters of dilute nitric acid. Boil for a moment, and pour the solution into a large volume of water. The white precipitate is bismuth oxy-nitrate, $BiONO_3$, formed by partial hydrolysis of the normal nitrate. Note that bismuth was not oxidized to an acid by the treatment with nitric acid.

Silicon.

12. Reduction of Silicon Dioxide. Grind 2 g. of sand to a fine powder and stir in 1 g. of powdered magnesium. Place the mixture in a test tube, and heat the mixture in the hood. Take care to point the test tube away from your neighbors and yourself. After the reaction is over, allow the tube to cool and drop a little of the residue into 2–3 cc. of concentrated hydrochloric acid. The spontaneously inflammable gas is silicon hydride. (**318.**) Represent all these reactions by equations.

QUESTIONS.

1. What gas, other than nitrogen, remains after absorbing oxygen in pyrogallic acid in experiment 2?
2. By the aid of what other substances might you remove oxygen from the air, leaving the other components of the air?
3. Compare the result obtained in the thermal decomposition of ammonium nitrate and ammonium nitrite.
4. To which allotrope of phosphorus is gray arsenic analogous?
5. What would be the effect of heating arsenic with zinc? of adding an acid to the product? Contrast with phosphorus.
6. Arrange the elements of the phosphorus family in order of increasing atomic weights. How does this compare with observed changes in chemical properties?

7. Represent by equations the reactions (if any occur) of the hydroxy-compounds of the elements of the phosphorus family with sodium hydroxide and with hydrochloric acid.

8. How may binary compounds (other than salts) of the non-metals be prepared most readily? Represent by equations the formation of one such compound of each non-metal discussed in this exercise.

9. Why is a delicate test for the presence of arsenic important? How might you distinguish between the presence of arsenic and of antimony?

10. What product would result if sand were heated with excess carbon at a high temperature?

EXERCISE XXII.

OXIDATION–REDUCTION 1. COMPOUNDS OF CHROMIUM.

MATERIALS: Ammonium dichromate, arsenic, boric acid, lead (granulated), microcosmic salt, potassium chlorate, sodium carbonate, sodium hydroxide, sodium nitrate, sulfur (flowers). *Solutions:* Barium chloride, chromic chloride, cobaltous chloride or nitrate, copper sulfate, hydrogen sulfide water, lead acetate, magnesia mixture, potassium chromate, potassium dichromate, silver nitrate, sodium hypochlorite, sulfurous acid.

SPECIAL APPARATUS: Blast lamp, iron crucible (12 cc.).

DRY OXIDATION.

Examples of this type of oxidation are very common; as, for instance, the combustion of any substance in air. Instead of using atmospheric oxygen, a substance rich in oxygen may be employed as the *oxidizing agent.* The activity of an oxidizing agent depends on its ability to gain electrons under the conditions of the reaction. It is not necessary that a compound contain oxygen in order to be an oxidizing agent.

1. Oxidation of a Non-Metal. Chlorates are powerful oxidizing agents, especially in the solid form, but are little used because of the violence of their reaction. In this experiment use small amounts of materials and do not put your face over the crucible, as spattering may occur. In a porcelain crucible place about 1 g. of potassium chlorate. Heat until the salt melts, then remove the Bunsen burner and drop into the crucible a very small piece of carbon, such as a fragment of charred splint. What is the *oxidation product* in this case? How could you prove it if in doubt? To identify the *reduction product* of the reaction add a few cubic centimeters of water to the crucible contents (after cooling) and filter from unoxidized residue. To the filtrate add dilute nitric acid and a drop of silver nitrate solution. What does the white precipitate indicate? Into what reduction product does a chlorate always pass? Write an electron equation, showing all steps, for the oxidation-reduction reaction just carried out.

2. Oxidation of a Metal. Fusion Conditions. In a dry crucible place 5 g. of sodium nitrate and one-third as much granulated

lead. Heat strongly for some time and after cooling soak out the residue in about 10 cc. of water and filter from the insoluble residue. This residue is largely litharge (PbO), perhaps containing unoxidized lead. Try to dissolve a part of this residue in dilute nitric acid. What is the nature of this metal oxide? Acidify the filtrate with dilute sulfuric acid, observing and explaining any phenomena noticed. This reaction is the chief commercial source both of litharge and of sodium nitrite.

Use of a Medium.

The previous experiments employed no medium. However, most oxidation-reduction reactions proceed more smoothly if there is also present some substance which can react with (and thereby remove) either the oxidation product or the reduction product. Obviously, to secure reaction, the medium must be of opposite chemical nature to the substance with which it is to react. Hence, if a non-metal is to be oxidized, we should provide a *basic* medium. The substances most commonly used for the basic medium are the alkali bases, carbonates, and sometimes the oxides.

3. Oxidation of a Non-Metal in Basic Fusion. Grind together about 0.5 g. of arsenic with two or three times as much sodium nitrate. Place the mixture in an iron crucible, add a small lump of solid sodium hydroxide, and heat in a good Bunsen flame for five minutes. When nearly cold, place the crucible in a small beaker and add 15 cc. of water. Disintegrate the cake and remove most of it from the crucible. Acidify the residue with a little dilute hydrochloric acid and account for any brown fumes evolved. (Cf. (2).) Dilute to 20 cc. and when the cake is thoroughly disintegrated, filter from insoluble residue, make the filtrate strongly alkaline with ammonium hydroxide and add about 5 cc. of magnesia mixture. What does the white precipitate prove? (XXI, 11.) Write equations for the oxidation-reduction reaction and for the reactions leading to the identification of the oxidation product. What is always the reduction product of an alkali nitrate?

4. Reaction of Sodium Nitrate, Sulfur, Sodium Carbonate. Mix, but do not grind, 1 g. of powdered sulfur with twice as much each of powdered sodium nitrate and sodium carbonate. Place the mixture in an iron crucible and heat strongly. *Caution: The mixture may spatter.* What will be the oxidation-reduction prod-

ucts of this reaction? Devise, *and carry out*, tests to demonstrate whether or not your predictions are correct. Write electron equations for this reaction, and for the reactions by which you identified the products.

5. Oxidation in Acid Medium. Prepare a little copper sulfide and place a very small amount of the wet sulfide in a crucible with a mixture of sodium nitrate and microcosmic salt. Heat the mixture strongly for some minutes and observe the color of the residue. Microcosmic salt forms a stable metaphosphate when heated. Consult p. 263 of the text for an explanation of why metaphosphates have an acid reaction. There are few acid mediums suitable for dry oxidation. Why? Boron trioxide and silica are other possibilities. Write an electron equation expressing the oxidation-reduction reaction carried out in this experiment.

6. Optional. Mix a small quantity of cobalt sulfide with a gram of pulverized sodium nitrate and 2 g. of boric acid. Place the mixture in a crucible and heat for some time in the blast lamp. Account for the color of the resulting product.

Solution ("Wet") Oxidation. The Chromium Series.

Refer to XII for other cases of this type of oxidation. Chromium has two important valences, 3^+ and 6^+. The hydroxide of trivalent chromium is amphoteric and of hexavalent chromium acidic. The hexavalent element occurs in salts such as the chromates and dichromates. Note the characteristic color of solutions of chromic chloride, potassium chromate, and potassium dichromate on the side shelves. These colors are very useful in identifying the state of oxidation of chromium.

7. Chromate-Dichromate Relations. In a test tube acidify a solution of potassium chromate with dilute sulfuric acid. To a solution of potassium dichromate add excess ammonium hydroxide. Explain the changes, and write equations to represent the reactions taking place. (**343.**) Note that **no oxidation-reduction is involved** in these changes.

8. Oxidation of Cr^{3+} to Cr^{6+}. This change may be carried out either in solution or by a fusion oxidation, but in either case a basic medium must be employed. Why? To about 5 cc. of chromium chloride solution add an equal volume of sodium hydroxide. What is the precipitate? Add 10 cc. of sodium hypochlorite solution and boil for a few minutes. Filter, if any solid remains,

and note and explain the color change. Save this solution. By what chemical test — not color — could you prove the nature of the oxidation product? Write the electron equation for the above reaction.

9. Reduction of Cr^{6+} to Cr^{3+}. To a portion of the yellow solution obtained in (8) add sulfur dioxide water until the yellow color changes. To 5 cc. of potassium dichromate solution add excess sulfur dioxide water. Is the result the same? To either of these solutions add ammonium hydroxide in slight excess, heat to boiling, and filter hot. Test the filtrate for a sulfate and, if found, explain its source. Write electron equations for the reaction of a chromate and of a dichromate with sulfurous acid.

10. Intra-Molecular Oxidation-Reduction. Pulverize about 2 g. of ammonium dichromate. Heap the pulverized salt in a porcelain dish, place the dish on a ring of the lamp stand and gently warm the dish with a low flame. When the dichromate has been warmed, direct the flame down upon the salt in the dish. The reaction will proceed of itself after it gets under way. Express the reaction by an electron equation. Refer to XXI, 1, for another example of this type of oxidation-reduction.

11. Fusion Oxidation of Cr^{3+}. (*Optional.*) Select an appropriate combination of reagents for converting the green solid obtained in (10) to a chromate, and carry out the operations by a fusion method. Perform the fusion in an iron crucible.

12. Importance of Conditions. Depending on conditions, the same substance may react either as an oxidizing agent or as a reducing agent. In experiment (9) sulfur dioxide in solution was employed as a reducing agent, and S^{4+} was thus oxidized to S^{6+}. Sulfurous acid has considerable industrial use as a reducing agent. Since sulfur has also a valence of 0, it will be noted that sulfur dioxide might at times act as an oxidizing agent, S^{4+} passing to S^{0}. Mix 10–15 cc. of hydrogen sulfide water with about as much sulfurous acid. Note the white precipitate and write an electron equation for the oxidation-reduction reaction which produced it.

13. Proper Choice of Medium Essential. In combination, lead has the valences 2^+ and 4^+. In the lower valence lead is primarily basic and in higher valence entirely acidic. Dissolve a little lead in a small amount of concentrated nitric acid (a powerful oxidizing agent). Dilute the solution somewhat and divide into two portions. Make one alkaline with sodium hydroxide and add a

few cubic centimeters of sodium hypochlorite solution. What compound is formed? To the second portion add sodium hydroxide slowly until the first precipitate dissolves. What is the nature of plumbous hydroxide? Write electron equations for the oxidation of lead under the different conditions.

QUESTIONS.

1. Into what reduction product does each of the following substances pass when used as an oxidizing agent? Indicate in each case the valence drop of the element concerned. (*a*) Sodium nitrate; (*b*) sodium hypochlorite; (*c*) potassium chlorate; (*d*) hypochlorous acid; (*e*) oxygen; (*f*) potassium chromate in sulfuric acid solution; (*g*) potassium dichromate in sulfuric acid solution; (*h*) sulfur dioxide in solution.

2. What type of compound is formed when: (*a*) a metal is oxidized in dry oxidation without either basic or acidic medium? (*b*) a metal is oxidized in a dry oxidation with the proper medium? (*c*) a metal is oxidized in solution with the proper medium? (*d*) a non-metal is oxidized in water solution? (*e*) a non-metal is oxidized with a basic medium?

EXERCISE XXIII.

OXIDATION-REDUCTION 2. COMPOUNDS OF MANGANESE.

MATERIALS: Copper, lead dioxide, manganese dioxide, sodium hydroxide, sodium nitrate, zinc. *Solutions:* Acetic acid, barium chloride, chlorine water, ferrous sulfate, manganous sulfate, potassium iodide, potassium permanganate silver nitrate, sodium hypochlorite, stannous chloride, sulfurous acid.
SPECIAL APPARATUS: Iron crucible (12 cc.).

Oxidation-reduction reactions in the series of manganese compounds is more complicated than with chromium, since manganese forms compounds in the positive valences 2, 4, 6, and 7 (in addition to unimportant compounds in other valences). Of these compounds, the extremes (2^+ and 7^+) are most important. Divalent manganese is basic; in the valence 4^+ the element is practically neutral; in the valence 6^+ weakly acidic; and in the valence 7^+ quite strongly acidic. The series offers a splendid opportunity for a study of the effect of conditions on the degree of oxidation.

1. Conversion of Mn^{2+} to Mn^{7+}. Stages of Oxidation. Place 5 cc. of manganous sulfate solution in a test tube, heat to boiling, and add sodium hydroxide to alkalinity. Note the first color of the precipitate, filter, and observe the darkening of the precipitate when exposed to air. Scrape the precipitate into a test tube, add 10–15 cc. of *strong* sodium hypochlorite solution, and boil gently for at least three minutes. The dark precipitate is essentially manganese dioxide, formed by the oxidation of $Mn(OH)_2$ to $Mn(OH)_4$, which decomposes. Manganese dioxide is the only important compound of manganese in the valence 4^+. Write an electron equation for this oxidation-reduction.

Filter a portion of the hot solution and note the green color. This color is characteristic of Mn^{6+} (present as sodium manganate). *It is difficult to obtain much oxidation to this stage in solution.* If your solution is not green, add more sodium hypochlorite and heat again. Finally, to the green solution, add a very little acetic acid and note the characteristic pink (or purple) color due to Mn^{7+} (as sodium permanganate). Sodium hypochlorite itself does not

receive electrons readily enough to cause oxidation of Mn^{6+} to Mn^{7+}, but hypochlorous acid, formed on adding the acetic acid, will do so. Make a table indicating the different valences of manganese and opposite each valence place the formula of a typical compound of manganese in that valence, together with the characteristic color. Write electron equations for all the reactions just carried out.

2. Oxidation of Manganese Compounds in Basic Fusion. The previous experiments illustrated the various stages of oxidation of manganese, but are not a good means of ascending the series. A fusion reaction is necessary to prepare sodium manganate feasibly. In a mortar mix intimately 0.5 g. of manganese dioxide with 3 g. of sodium nitrate. Place the mixture in an iron crucible, add a small lump of sodium hydroxide, and heat strongly for five minutes. When cool, soak out the fusion mass in 15 cc. of water and filter from solid residue. From the color of the solution judge what valence of manganese was obtained and write the electron equation for the reaction. Save this solution for use in (3).

3. Auto Oxidation-Reduction. Manganate to Permanganate. Dilute the solution from (2) to about 25 cc. and add acetic acid drop by drop with stirring until a distinct color change is produced. The solution should not be made more than *very feebly* acid. Note the precipitate formed at the same time. What is this precipitate, and what compound is in solution? (**346.**) Express the change by an electron equation.

4. Reduction of Permanganate in Acid Solution. (*a*) To about 5 cc. of potassium permanganate solution add an equal amount of concentrated hydrochloric acid and warm (Hood) until a colorless solution results. From the fact that the solution *is* colorless, what valence of manganese must be present? (Consult the table you prepared in (1).) Express the reaction by an electron equation.

(*b*) To a warm solution of stannous chloride add a few drops of potassium permanganate solution and a few drops of dilute sulfuric acid. Result?

(*c*) Acidify 10 cc. of ferrous sulfate solution rather strongly with dilute sulfuric acid, heat nearly to boiling, and add 5 cc. of potassium permanganate solution. Express these reactions by electron equations. Note that in (*b*) and (*c*) it is the metal ion which is oxidized.

$NaNO_3 + MnO_2 + NaOH \rightarrow Na_2MnO_4$

$NaNO_2 + H_2O$

[illegible]

$3Na_2MnO_4 + 4C_2H_3O_2 \rightarrow 2Na\ [illegible]$

$MnO_2 + 4NaC_2H_3O_2 + 2H_2O$

4) a) $2KMnO_4 + 16HCl \rightarrow 2KCl + 2MnCl + 8H_2O$

b) $SnCl_2 + 2KMnO_4 + 2H_2SO_4 \rightarrow SnSO_4 +$

$K_2SO_4 + 2HCl$

$6FeSO_4 + 2H_2SO_4 + 2KMnO_4 \rightarrow K_2SO_4$

SO_4

$+ 5Fe_2(SO_4)_3 + [illegible]$

5. Oxidizing Action of Manganese Dioxide. Treat a little manganese dioxide with concentrated hydrochloric acid (Hood) and decide what valence of manganese is produced. Warm the mixture if necessary to cause the reaction to proceed. From the results of (4) and (5) make a statement of the valence drop produced when manganese in valence 4^+, 6^+, 7^+, is used as an oxidizing agent in *acid* solution. Why should this valence be the stable valence for manganese in acid solution?

6. Reduction of Permanganate in Basic Solution. To 10 cc. of sulfur dioxide water add sodium hydroxide to alkalinity. What is formed? To this solution add a few drops of potassium permanganate solution and warm. What is the precipitate? Compare it with the precipitate obtained in (1). Filter the solution, note the absence of color in the filtrate, and test the filtrate to prove the presence of the suspected oxidation product. Write an electron equation for the oxidation-reduction reaction concerned. What would be the reduction product if potassium manganate were substituted for potassium permanganate in this experiment?

7. Importance of Conditions. Sections (4) and (6) have afforded one demonstration of the importance of conditions in oxidation-reduction reactions, since different products were formed when different mediums were used. The choice of oxidizing agent may also be an important factor, since not all oxidizing agents gain electrons with the same degree of ease. To about 1 cc. of manganous sulfate solution add 5 cc. of concentrated nitric acid and heat to boiling. Nitric acid is a powerful oxidizing agent. From the color of the solution judge whether or not manganese has been oxidized to any higher valence. Now add 5 cc. of water and gradually add a gram of lead dioxide. Boil for a moment, allow the solid to settle well, and note the color of the solution. What has been formed? Write the electron equation for the reaction. Such an oxidation of manganese in acid solution is very unusual, and gives a striking illustration of the importance of conditions.

8. Oxidation of Manganous Salt by a Permanganate. To 10 cc. of manganous sulfate solution add about 3 cc. of potassium permanganate solution. Note the precipitate, filter, and observe that the purple manganate has been destroyed. Such a reaction would not be possible if manganese did not form a compound in a valence intermediate between 2^+ and 7^+ — the valence of manganese in the reagents employed. Express the reaction by an electron equation.

9. Displacement Involves Oxidation-Reduction. Write electronic equations representing the action of zinc with hydrochloric acid, chlorine with potassium iodide solution, and copper with silver nitrate solution. Actually carry out the reactions if you have any doubt whatever concerning the products. Indicate in each case which substance is oxidized and which reduced. Remember that the arrangement of the electromotive series is based on the ability of each metal to reduce the ions of those standing below it in the series.

EXERCISES.

1. Indicate the conditions (*i.e.*, the nature of the medium, and whether a dry or solution reaction) which are necessary to bring about the following changes.

$$Mn^{2+} \longrightarrow Mn^{4+}$$
$$Mn^{2+} \longrightarrow Mn^{6+}$$
$$Mn^{4+} \longrightarrow Mn^{2+}$$
$$Mn^{6+} \longrightarrow Mn^{4+}$$
$$Mn^{7+} \longrightarrow Mn^{4+}$$
$$Mn^{7+} \longrightarrow Mn^{2+}$$
$$Mn^{4+} \longrightarrow Mn^{6+}$$

2. Choosing suitable substances, represent each of the above transformations by an equation.

EXERCISE XXIV.

SEPARATION OF THE METAL IONS INTO ANALYTICAL GROUPS.

MATERIALS: Solutions of the salts mentioned in introductory paragraph, ammonium carbonate, ammonium chloride, ammonium sulfide, hydrogen sulfide water.

In separate labeled test tubes place 2–3 cc. of solutions of aluminum sulfate, ammonium chloride, antimony trichloride, arsenic trichloride, barium chloride, bismuth trichloride, cadmium sulfate, calcium chloride, chromium chloride, cobaltous chloride, copper sulfate, ferrous sulfate, lead acetate, magnesium chloride, manganous sulfate, mercuric chloride, mercurous nitrate, nickel sulfate, potassium chloride, silver nitrate, sodium chloride, stannic chloride, stannous chloride, strontium chloride, zinc sulfate.

1. The Hydrochloric Acid Group. Dilute each solution with about an equal volume of water and to each tube add a few drops of dilute hydrochloric acid. Record the metal ions that yield a precipitate with hydrochloric acid, and in each case describe the color and physical appearance of the precipitate (such as: flocculent, curdy, crystalline, powdery, etc.). Discard the solutions in which precipitation occurred. This set of metal ions is called the *hydrochloric acid group,* and dilute hydrochloric acid is the *group reagent.* This is the first group usually separated during a systematic analysis.

2. The Hydrogen Sulfide Group. To all the remaining solutions (which, of course, now contain hydrochloric acid) add a little hydrogen sulfide water. Again note the ions which give precipitates, and record as above the color and physical appearance of the precipitates. This set of ions comprise the *hydrogen sulfide group* and is the largest of the analytical groups. Hydrogen sulfide in *acid solution* is the group reagent. Discard all the solutions which gave a precipitate here.

3. The Ammonium Hydroxide Group. Carefully boil off all the hydrogen sulfide from the remaining solutions. Use paper

moistened with lead acetate solution as a test for hydrogen sulfide. Be very careful not to introduce lead ion into the solutions by allowing the test paper to come into contact with the test tubes. To the tube containing the iron solution add a little nitric acid and boil to oxidize the iron, since ferric hydroxide precipitates better than ferrous hydroxide. Then to each tube add 5–7 cc. of ammonium chloride solution and ammonium hydroxide until the solution is quite strongly alkaline. Boil for a moment. Note, as before, the ions yielding precipitates. They constitute the *ammonium hydroxide group.* Discard these solutions. *Note:* During the boiling in this section, a precipitate may form in the test tube containing the manganese solution because of atmospheric oxidation. Not all of the manganese will precipitate and manganese does not belong in this group. Take a fresh portion of manganese solution for the next section.

4. The Ammonium Sulfide Group. To the remaining solutions add a cubic centimeter of ammonium sulfide solution and note the ions which form precipitates. Note carefully the colors of these precipitates, as two of them have unusual colors for sulfides. These metal ions constitute the *ammonium sulfide group.* Discard these solutions.

5. The Ammonium Carbonate Group. To the remaining solutions add a little more ammonium chloride solution and a few drops of ammonium carbonate solution. Heat to boiling for a moment. Note the ions giving precipitates, and describe their characteristics as before. These ions compose the *ammonium carbonate group.* Discard these solutions.

6. The Alkali Group. Note the ions which have failed to yield precipitates. These are the metals of the alkali group, and magnesium. They respond to no group reagent and constitute the last " left over " group in a systematic analysis.

7. Importance of Conditions in Precipitating the Groups. If conditions are not properly regulated, an ion may fail to precipitate in the proper group and appear in some later one. To 5 cc. of cadmium sulfate solution add 5 cc. of concentrated hydrochloric acid and then a little hydrogen sulfide water. Why does not cadmium sulfide precipitate? Apply the successive group reagents in the manner just outlined and determine where cadmium may appear if missed in the hydrogen sulfide group. You may find it in two of the following groups.

To 5 cc. of zinc sulfate solution add two volumes of hydrogen sulfide water. Result? Why is the presence of hydrochloric acid necessary in precipitating the hydrogen sulfide group? On the basis of solubility product, explain the effect of the acid.

Place 5 cc. of magnesium chloride solution in a test tube and add an excess of ammonium hydroxide. In what group might magnesium appear if you fail to have ammonium chloride present when the group reagents are applied?

8. Dilute 5 cc. of lead acetate solution with an equal volume of water and add hydrochloric acid. Let the precipitate settle and decant some of the clear liquid into another test tube. To this add hydrogen sulfide water. What is the precipitate? This is the only case where a metal ion properly falls into two of the analytical groups.

QUESTIONS.

1. Write equations for all the reactions involved in the experiments of this exercise.
2. On the basis of solubility product, explain why cadmium sulfide can be precipitated from a solution containing a little acid, but not from a strongly acid solution.
3. What additional metal ions would fall in the hydrogen sulfide group if no hydrochloric acid were added before adding hydrogen sulfide?
4. Why could not sodium carbonate replace ammonium carbonate as one of the group reagents?
5. If sodium hydroxide were used instead of ammonium hydroxide in precipitating the ammonium hydroxide group, what other metal ions would be brought down in this group and what hydroxides precipitated by ammonium hydroxide would not be obtained?

EXERCISE XXV.

METALS 1. ACTIVITY OF METALS. THE ALKALI AND ALKALINE EARTH METALS.

MATERIALS: Aluminum, barium hydroxide, calcium hydroxide, copper, iron, lead, magnesium, mercury, tin, zinc. *Solutions:* Aluminum chloride, ammonium carbonate, ammonium chloride, barium chloride, calcium chloride, copper sulfate, cupric chloride, ferric chloride, lead acetate, magnesium chloride, mercuric chloride, potassium chloride, potassium iodide, potassium hydrogen pyroantimonate, silver nitrate, sodium carbonate, sodium chloride, sodium cobaltinitrite, stannous chloride, strontium chloride, zinc chloride, zinc sulfate.

SPECIAL APPARATUS: Iron crucible (12 cc.), platinum wire.

ACTIVITY OF METALS.

In studying the metals a knowledge of their activity is important. Relative activity may be judged in several ways: for instance, if a metal displaces hydrogen from an acid, it is more active than hydrogen, and the rapidity of the reaction tells, in a general way, whether it is very active or only moderately so. The reaction of a metal with salts of other metals in solution will place its activity relative to the combined metal. Observations as to whether or not the salts of a given metal are hydrolyzed affords indirect evidence of activity, since there is a direct relation between strength of a base and the activity of a metal. What is shown about the strength of a base if a salt does not hydrolyze at all? What, if it hydrolyzes to give a basic reaction? What, if the reaction is acid? It so happens that strong bases are soluble in water, at least to a moderate degree, while the weak bases, except ammonium hydroxide, are insoluble in the ordinary sense. It is, however, unsafe to judge activity by one of these methods alone, since there are numerous exceptions.

With the above points in mind, carry out the experiments outlined in sections 1–4. Record all data in orderly form.

1. Displacement of Hydrogen. Try the reaction of small pieces of metallic copper, magnesium, iron, aluminum, zinc, mercury, lead, and tin with dilute hydrochloric acid. Allow plenty of

time for the reaction to start before deciding that none will take place, since the surface of some of the metals is often coated with a film of oxide which must dissolve before the metal itself can react. If no reaction is obtained with cold dilute hydrochloric acid, warm, and use stronger acid, for an inactive metal may react very slowly with a dilute acid. List these metals in order of decreasing activity, so far as you can judge from the rapidity of these reactions. Make careful note of any metals which fail to react.

2. Displacement of a Metal Ion by a More Active Metal. In separate test tubes place about 5 cc. of solutions of lead, copper, silver, stannous, and mercuric salts. Into each tube drop a small piece of zinc. Allow the metal to stand in contact with the solutions for at least five minutes, and note which metal ions are displaced by zinc. Obviously, these metals are less active than zinc.

Similarly, try the reaction of iron on solutions of copper, silver, and mercuric salts, and of copper on solutions of silver, stannous, and mercuric salts. Warm any solution in which reaction is not obtained in the cold.

Arrange all these metals in order of decreasing activity so far as the results of your experiments will permit.

3. Nature of the Hydroxide. To small portions of solutions of magnesium, aluminum, zinc, stannous, silver, ferric, lead, copper, and mercuric salts add sodium hydroxide gradually, with shaking, until a considerable excess is present. List the metals which give only temporary precipitates. What is the nature of these hydroxides? In the case of mercury and silver, the precipitate is the *oxide*, not the hydroxide.

4. Hydrolysis of Salts. Test with litmus, solutions of the chloride of sodium, magnesium, barium, aluminum, zinc, and copper. In the cases where the solution is neutral, what may be inferred about the strength of the base? What does an acid reaction indicate? Try the reaction of sodium carbonate solution on litmus.

From your data in sections 1–4, describe the activity of the metals tested with respect to the following points: (*a*) displacement of hydrogen, (*b*) metal ions which the metal in question will displace, (*c*) solubility of the hydroxide, (*d*) hydrolysis of a salt of the metal with a strong acid, (*e*) hydrolysis of a salt of the metal with a weak acid.

The Alkali Metals.

5. Flame Tests. Clean a platinum or nichrome wire by dipping it in hydrochloric acid and holding it in the Bunsen flame. Dip the cleaned wire into a solution of a sodium compound, and hold it in the non-luminous flame. Note the strongly colored flame produced. Rub the wire between the fingers and reheat. What do you conclude is the delicacy of this test? Clean the wire and test a solution of a potassium salt in the same way. Result? Try a flame test, using a mixture of solutions of sodium and potassium salts. Can you observe the potassium flame under these conditions? Using the mixed solutions, try the flame test, holding a layer or two of cobalt glass before your eye. Which flame color is visible through this glass?

6. Insoluble Sodium and Potassium Compounds. Nearly all salts of these metals are soluble, but one or two are sufficiently insoluble to permit their use in qualitative tests.

To 2 cc. of sodium chloride solution add an equal volume of potassium acid pyroantimonate solution ($K_2H_2Sb_2O_7$) and set the tube aside. After some time observe the white, crystalline deposit on the sides of the tube.

To a solution of a potassium salt add a *few drops* of sodium cobaltinitrite solution ($Na_3Co(NO_2)_6$).[1] This is a fairly delicate test for potassium ion.

7. Tests for Ammonium. In a small beaker place a few drops of a solution of an ammonium compound. Add 10 cc. of sodium hydroxide. Spread a wet strip of red litmus on the under side of a watch glass and place this over the beaker. *Warm* the solution and note the change in color of the litmus paper. Do not boil the solution or sodium hydroxide will be spattered on to the test paper.

Try the reaction of a solution of an ammonium salt with sodium cobaltinitrite solution. How could ammonium salts be destroyed before testing for the presence of potassium?

8. Nessler's Reagent. To 5 cc. of mercuric chloride solution add potassium iodide solution until the first precipitate just dissolves. To the clear solution add 5 cc. of sodium hydroxide. This combination is known as Nessler's reagent. Dilute two drops of ammonium hydroxide to 100 cc. with water and add a few drops of this reagent. The yellow color which results is a test for ammonia.

[1] For directions for conveniently preparing this reagent, see Treadwell and Hall, Vol. 1, *Qualitative Analysis*, 5th ed., page 77.

The Alkaline Earth Metals.

9. Calcium Hydroxide. Shake a gram of solid calcium hydroxide with half a test tube of water. Does the base appear to dissolve? Allow the suspension to settle and filter some of it. Test the filtrate with litmus, and add to it some ammonium carbonate solution. Is calcium hydroxide at all soluble? Could it be precipitated under any conditions? Try it.

Heat some solid calcium hydroxide in a dry test tube and draw conclusions as to the stability of this base toward heat.

10. Barium Hydroxide. Heat about 4 g. of barium hydroxide with 15 cc. of water until but little solid remains. Filter the hot solution and cool it under the tap. What do you conclude about the solubility of barium hydroxide?

Heat some of the solid hydroxide in a crucible over a strong flame. Will this base decompose at the temperature of the Bunsen burner? Remember that crystallized barium hydroxide contains eight molecular proportions of water of hydration. There are three common bases which are stable towards heat. Which are they?

11. Flame Tests. By the same method used in (5), determine the color imparted to the Bunsen flame by solutions of a salt of calcium, strontium, and barium. Can you tell the calcium and strontium flames apart? Flame tests alone are rarely of much value in analytical work.

QUESTIONS.

1. By what criteria may the relative activity of metals be judged?
2. What is the "solubility rule" as it applies to metal hydroxides?
3. What is an amphoteric hydroxide? In general, are the elements whose hydroxides are amphoteric active metals? Mention any exceptions to your answer with which you are familiar.
4. What is meant by hydrolysis? What must be true of the nature of a salt in order that extensive hydrolysis may occur?
5. Make a general statement regarding the solubility of compounds of sodium and potassium.
6. Is it possible to precipitate a soluble salt, such as sodium chloride? How may this be done?
7. By what test may the presence of an ammonium salt be shown?
8. Make a general statement regarding the solubility of compounds of the alkaline earth metals.
9. Represent by equations three reactions which are characteristic of solutions of the hydroxides of metals.
10. Represent by equations three different reactions which are characteristic of the active metals.

Lx [illegible] yellow
Lt. [illegible]
Ba [illegible]

EXERCISE XXVI.

METALS 2. MAGNESIUM. ZINC. ALUMINUM. IRON.

MATERIALS: Iron (filings), iron nails, potassium ferricyanide. *Solutions:* Aluminum chloride, ammonium chloride, ammonium sulfide, chlorine water, ferric chloride, ferrous sulfate, hydrogen sulfide water, lead acetate, magnesium chloride, potassium ferrocyanide, potassium thiocyanate, sodium carbonate, zinc sulfate.

The general reactions exhibited by these metals, in common with other active metals, have been illustrated in Exercise XXV. In this exercise, more specific reactions are illustrated.

1. Hydrolysis of Salts. Evaporate small portions of solutions of magnesium chloride, aluminum chloride, and ferric chloride to dryness in a porcelain dish. When almost all the water is gone, test the escaping vapors with litmus. Try to dissolve the residue in water, and in hydrochloric acid. What is this residue? Account for its formation.

2. Reaction with Sodium Carbonate. To separate small portions of solutions of a salt of magnesium, zinc, aluminum, and ferric iron, add sodium carbonate solution, warm, and filter. Wash each precipitate several times with hot water, and finally test the washed precipitate for a carbonate by adding a few drops of hydrochloric acid and watching for effervescence. Explain why the precipitate is not in all cases the expected carbonate. What is the precipitate when not the carbonate?

3. Reaction with Ammonium Sulfide. To separate solutions of a zinc, aluminum, and ferric salt add ammonium sulfide solution in small amount, and warm. What is the precipitate in each case? Filter, wash thoroughly, and dissolve the precipitate in dilute hydrochloric acid, using lead acetate paper to test for hydrogen sulfide, which will be evolved if the precipitates are the sulfide. Explain the formation of any precipitate other than the sulfide.

4. Analytical Separations. In Ex. XXIV you found that when the metal ions are separated into groups for analysis, iron and

aluminum fall in the ammonium hydroxide group, zinc in the ammonium sulfide group, and magnesium in the last group with the alkali metals. Try the following reactions, using small quantities of the metal salt solutions in each case.

(*a*) A magnesium salt with 10 cc. of ammonium chloride solution and ammonium hydroxide.

(*b*) A magnesium salt with ammonium chloride solution and sodium hydroxide.

(*c*) An aluminum salt with ammonium hydroxide.

(*d*) An aluminum salt with excess sodium hydroxide.

(*e*) A zinc salt with excess ammonium hydroxide.

From the results of these experiments, give two reasons why, during an analysis, ammonium hydroxide is used instead of sodium hydroxide to precipitate the hydroxides of iron and aluminum from solutions which may contain magnesium or zinc. Zinc hydroxide is insoluble. Why is it not precipitated by ammonium hydroxide?

Prepare a mixture of about 5 cc. each of a solution of a salt of aluminum, zinc, and magnesium. Applying the reactions illustrated above, obtain each metal in this mixture in the form of a *separate precipitate.*

5. Tests for Iron. Iron forms compounds in two valences, and it is often necessary to determine which valence is present. Dilute one or two drops of ferric chloride solution with half a test tube of water and divide into two portions. To one, add potassium ferrocyanide solution, and to the other, potassium thiocyanate solution. Equations? Both of these reactions are used as a test for the *ferric* ion, and are extremely sensitive. Determine whether or not the red color produced by potassium thiocyanate is a precipitate.

Dissolve a small crystal of potassium ferricyanide in half a test tube of water and add a little of this solution to ferric chloride solution and to ferrous sulfate solution. The deep blue precipitate is a test for the *ferrous* ion. Ferric salts react with the reagent, but do not give a blue precipitate.

6. Oxidation-Reduction of Iron Salts. Iron in the ferrous state is so readily oxidized that a ferrous salt almost always contains a little of the ferric salt. Add potassium thiocyanate solution to a solution of ferrous sulfate, and note the red color. Remember that this is due to ferric iron *impurity*, for ferrous salts do not react with this reagent.

Dissolve a *very little* iron filings in dilute nitric acid, and when all the iron has dissolved, dilute a great deal and test for both valences of iron. Which valence was formed under these conditions? Write the electron equation for the reaction.

Place a pinch of iron filings in 5 cc. of dilute sulfuric acid, and when reaction has become vigorous, test to see which valence of iron is present.

Satisfy yourself by the proper test that the ferric chloride reagent contains *no* ferrous compound. To a portion of ferric chloride solution add an equal volume of hydrogen sulfide water, and then test for the presence of ferrous ion. Equation? Boil another portion of ferric chloride solution with an iron nail for a short time, and test for the ferrous ion. Equation?

To a few drops of ferrous sulfate solution add 10 cc. of chlorine water. Let this stand for a short time and then test for both valences of iron. What has happened? Write an equation for this reaction.

QUESTIONS.

1. What does the hydrolysis of the chlorides of the metals studied in this exercise indicate about the chemical nature of the metal?
2. Explain why the reaction of magnesium chloride with water goes to completion when the solution is evaporated to dryness.
3. Account for the fact that a solution of sodium carbonate may cause the precipitation of a metal hydroxide.
4. How can you obtain separate precipitates of the hydroxides from a solution which contains salts of aluminum, magnesium, and zinc?
5. What tests distinguish ferric from ferrous iron?
6. Mention several reducing agents by which ferric iron may be converted into ferrous, and write an equation for one such reaction.
7. Mention several substances by which ferrous iron may be converted into ferric, and write an equation for one such reaction.
8. What would be the result of the reaction of each metal studied in this exercise with sulfuric acid? with sulfur? with copper sulfate solution?

EXERCISE XXVII.

METALS 3. TIN. LEAD. COPPER. MERCURY.

MATERIALS: Aluminum foil, copper scrap, lead oxide (litharge), lead dioxide, red lead, mercury, tin. *Solutions:* Bismuth trichloride, bromine water, chlorine water, copper sulfate, hydrogen sulfide water, mercuric chloride, potassium chromate, potassium ferrocyanide, stannic chloride, stannous chloride.

This group of metals form compounds in two valences: tin and lead in the valences 2^+ and 4^+; copper and mercury in the valences 1^+ and 2^+. Keep in mind the position of these elements in the Electromotive Series.

1. Tin with Hydrochloric Acid. Place a lump of tin in 10 cc. of concentrated hydrochloric acid, warm a little, and let stand. Do other sections while waiting for this. Notice that a large excess of hydrochloric acid is present. What compound do you expect to form? Take a portion of the solution and test (see sec. 3) to determine whether stannous or stannic chloride is formed. Explain why you obtain this valence under these conditions.

2. Stannous Compounds. To a few drops of stannous chloride reagent add hydrogen sulfide water. Note the color and appearance of the precipitate. Test its solubility in a little concentrated hydrochloric acid.

Precipitate a little stannous hydroxide, filter, and wash very thoroughly. Scrape the wet precipitate into a crucible and heat gently until dry, and then strongly. The brown substance first formed is stannous oxide. What occurs during the heating?

3. Stannous Compounds as Reducing Agents. Tin in the valence 2^+ is easily oxidized, and, therefore, divalent tin compounds are good reducing agents. To a little mercuric chloride solution add stannous chloride solution drop by drop. The first precipitate should be white, but further addition of stannous chloride solution will cause it to darken. Write electron equations for these reactions, showing two stages of reduction of the mercuric salt.

To 5 cc. of stannous chloride solution add sodium hydroxide until the first permanent precipitate dissolves. Why does it dissolve?

What is now in solution? To a little bismuth chloride solution add an equal amount of ammonium hydroxide. The precipitate is bismuth oxy-hydroxide, BiOOH. Filter this, and pour over the filter paper the alkaline solution of stannous hydroxide just prepared. Bismuth oxy-hydroxide is reduced to metallic bismuth, which appears as the glossy black coating on the filter paper. In the absence of interfering ions, this reaction is the usual test for bismuth. Write electron equations for the oxidation-reduction reaction.

4. Stannic Compounds. To a little stannic chloride solution add bromine water until the red color of bromine persists. Boil for a short time, then add hydrogen sulfide water. Compare the color of the resulting precipitate with the one obtained in (2). Write equations for all the reactions involved.

Boil a small lump of tin with concentrated nitric acid. Remember that all nitrates are soluble. What is the precipitate?

Heat stannic chloride solution for a few minutes with a lump of tin and then test the solution for the presence of a stannous salt (sec. 3). Represent these reactions by equations.

5. Oxides of Lead. Try the action of hot, dilute nitric acid separately on *small* portions of litharge (PbO) and lead dioxide. Note the color of these oxides, and also draw conclusions as to their nature, *i.e.*, whether basic or acidic.

To a gram of red lead (Pb_3O_4) add 10 cc. of dilute nitric acid, and warm. Compare the appearance of the residue with a sample of lead dioxide. Are they apparently the same? Filter a portion of this mixture, dilute the filtrate with water, and add potassium chromate solution. The yellow precipitate is lead chromate. (This is soluble in strong nitric acid. If it fails to come down at once, add a few drops of a base.) Write an equation for the action of nitric acid with red lead.

6. Amalgamation. Mercury has the unusual property of dissolving many metals at ordinary temperature. Such solutions are called *amalgams.*

Warm a piece of aluminum foil with mercuric chloride solution until the metal has become coated with mercury (which it displaced). Remove the amalgamated foil, wash, and let stand on the desk for some time. Account for the white film with which it becomes covered. Place the foil in hot water and note the evolution of a gas. Why should the aluminum amalgam react with water while ordinary aluminum cooking utensils do not?

Optional. Warm a penny with dilute nitric acid till reaction just begins. This is to remove grease. Place the coin in mercuric chloride solution for a time. Save the coin in your desk and examine it at the next exercise. What becomes of the coating of mercury?

7. Mercury with Nitric Acid. To a small globule of mercury add dilute nitric acid, warm, and allow the reaction to continue for a short time. Pour off most of the solution and to it add a few drops of hydrochloric acid. What is the precipitate? Add an excess of chlorine water and explain the disappearance of the precipitate.

To the remaining mercury, add concentrated nitric acid and boil gently until all of the metal disappears, and for a few minutes longer. Divide the solution into two portions. To one portion add hydrochloric acid. Is any mercur*ous* compound left? To the other, add excess stannous chloride solution. Would you conclude that mercury is oxidized easily, or with difficulty? Note that the stannous chloride-mercuric chloride reaction is used to test for both tin and mercury.

8. Tests for Copper. To a few drops of copper sulfate solution add excess ammonium hydroxide until any precipitate which may form has disappeared. Account for the blue color.

Dilute a few drops of copper sulfate solution with several volumes of water and add potassium ferrocyanide solution. Both of these reactions are used as tests for copper ion, the ferrocyanide reaction being the more delicate.

9. Copper with Halogen. Treat a few pieces of copper scrap with 15 cc. of chlorine water. Allow the reaction to proceed for some time, and then test the solution for dissolved copper (copper ion). Account for its presence.

QUESTIONS.

1. Show by equations how to bring about the following transformations:

$Sn \longrightarrow SnCl_2 \longrightarrow SnS \longrightarrow SnCl_4 \longrightarrow Sn.$

$Sn \longrightarrow Sn(OH)_2 \longrightarrow Na_2SnO_2 \longrightarrow Na_2SnO_3.$

$Na_2SnO_2 \longrightarrow SnCl_2 \longrightarrow SnO \longrightarrow SnO_2.$

$Hg \longrightarrow Hg(NO_3)_2 \longrightarrow HgNO_3 \longrightarrow HgCl.$

$HgCl_2 \longrightarrow HgCl \longrightarrow HgCl_2 \longrightarrow HgO \longrightarrow Hg(NO_3)_2 \longrightarrow Hg.$

EXERCISE XXVIII.

QUALITATIVE SEPARATIONS.

MATERIALS: Ferrous sulfide. *Solutions:* Acetic acid, aluminum sulfate, ammonium carbonate, ammonium oxalate, barium chloride, bismuth trichloride, calcium chloride, chromic chloride, copper sulfate, ferric chloride, lead nitrate, mercuric nitrate, mercurous nitrate, potassium chromate, potassium ferrocyanide, silver nitrate, sodium acetate, sodium hypochlorite, stannous chloride, strontium chloride, "Unknowns" (issued by the assistant).
SPECIAL APPARATUS: Hydrogen sulfide generator.

In the division of metal ions into analytical groups (Ex. XXIV), you found that metal ions may be grouped on the basis of their reactions with certain reagents to form insoluble compounds, and in this way the *group* may be separated from other groups of metal ions. In separating from each other the ions of an individual group, advantage is taken of the fact that, although metals of a group have similar reactions as a whole, there are certain differences, and by successive treatment with a number of reagents *in proper order*, each metal ion may be separated from the others of the group — usually as a characteristic insoluble compound. It is necessary to control conditions rather carefully in order to obtain fairly complete separations.

1. The Hydrochloric Acid Group. Prepare small amounts of mercurous, silver, and lead chlorides. Add ammonium hydroxide to the first two and record the results. To the lead chloride add boiling water. You will recall that lead, silver, and mercurous ions comprise the hydrochloric acid group in a systematic analysis. The individual reactions in this section provide a means of identifying each member of this group. Prepare a mixture of about 1 cc. each of solutions of silver, mercurous, and lead salts. Devise a procedure by which you can *prove* the presence of each metal ion in the mixture, and carry out the operations to determine whether your scheme will work successfully. Secure " unknown solutions " from the assistant and determine which of these ions are contained in the solution.

2. Separation of the Members of the Ammonium Hydroxide Group. Iron, aluminum, and chromium compose this group. Prepare a mixture of about 5 cc. of solutions of a salt of each of these metals, heat to boiling, and add ammonium hydroxide to *slight* excess. Filter while still boiling hot. Scrape this precipitate into a beaker, add 10 cc. of sodium hydroxide, boil for a minute, and filter while *boiling hot.* This treatment dissolves aluminum hydroxide. Equation? To the filtrate add acetic acid very slowly until the solution is just acid to litmus. The precipitate is proof of the presence of aluminum.

Place the remaining precipitate (iron and chromium hydroxides) in a beaker, add 5 cc. of sodium hydroxide and 10 cc. of sodium hypochlorite solution, and boil for several minutes. Filter. The yellow color of the filtrate shows the presence of chromium. What chromium compound is now present? Write an equation for the reaction by which it was formed.

Ferric hydroxide has not been attacked by the previous reagents and remains on the filter paper. Dissolve some of this precipitate in hot dilute hydrochloric acid and apply the test for ferric iron (Ex. XXVI, 6).

3. Amphoterism of Chromium Hydroxide. To 5 cc. of a solution of chromium chloride add sodium hydroxide a few drops at a time. What is the first precipitate? Why does it dissolve in excess sodium hydroxide? Now heat the alkaline solution to boiling. Explain the resulting precipitate. (**329.**) Now explain why chromium hydroxide was not dissolved along with aluminum hydroxide in (2).

4. The Ammonium Carbonate Group. Try the behavior of small portions of solutions of calcium, strontium, and barium salts separately with solutions of ammonium carbonate, ammonium oxalate, and a little dilute sulfuric acid. Note carefully the appearance, rate of formation, and color of the sulfates of strontium and barium. Calcium sulfate is soluble to the extent of about 1 g. per liter, and will not precipitate from dilute solutions. Finally, test the reaction of these three ions with potassium chromate solution, first in neutral solution and then in a solution slightly acidified with acetic acid. Record your data in tabular form and note particularly the cases where any of the three ions failed to yield precipitates.

The great similarity in the solubility relations of the various

compounds of calcium, strontium, and barium makes their separation rather difficult, but by taking advantage of the differences in solubility of the sulfates and chromates, a separation can be made.

Start with 1–2 cc. portions of solutions of salts of these three metals (separately), and dilute to 10 cc. To each solution add a few drops of ammonium carbonate solution. The insolubility of the carbonates is used to separate this *group* from the other analytical groups (Ex. XXIV). To each precipitate add a little hot acetic acid until the precipitate just dissolves. Avoid much excess. Add to each solution about 5 cc. of sodium acetate solution (what effect has this?) and a few drops of potassium chromate solution. Barium is the only ion which forms a chromate under these conditions. To the tubes containing calcium and strontium ions, add a few drops of dilute sulfuric acid. Remember that strontium sulfate is white (see above) but now appears yellow because of the potassium present. If you filter and wash this precipitate, the yellow color will wash out. Calcium should not give a precipitate with either of these reagents. Make this solution alkaline with ammonium hydroxide and add ammonium oxalate solution, again recalling that calcium oxalate is actually white, but appears yellow because of the yellow solution. Obtain an unknown solution and apply the above procedure to determine which ions are present.

5. Separation of the Ions of the Copper Division of the Hydrogen Sulfide Group. Lead, mercuric, copper, bismuth (and cadmium, which is unimportant) comprise this group of metal ions, which yield sulfide precipitates in weakly acid solution. Cadmium will not be considered.

Set up a hydrogen sulfide generator. Keep this generator in the hood if space permits. If it is necessary for you to work at your desk because of lack of hood space, absorb the hydrogen sulfide in dilute ammonium hydroxide except when making a precipitation. Hydrogen sulfide is poisonous.

Prepare a mixture of not over 3 cc. each of solutions of mercuric, lead, copper, and bismuth salts. Add 5 cc. of dilute hydrochloric acid and 25 cc. of *hot* water. This may cause a precipitate to form (lead chloride or bismuth oxy-chloride), but such a precipitate may be neglected as it will be readily converted into the desired sulfide. Pass hydrogen sulfide into the solution, with stirring, until precipi-

tation is complete (about three minutes). Filter, make sure that precipitation is complete, and discard the filtrate.

Dilute 10 cc. of concentrated nitric acid to a volume of 50 cc., and mix well. Scrape the precipitated sulfides from the filter paper into a porcelain dish or pyrex beaker, add 10 cc. of the diluted nitric acid, and heat to boiling. Do not boil longer than a minute or two. Filter, and save both the precipitate and the filtrate (1).

Test for mercury. Mercuric sulfide is the only sulfide of this group which does not dissolve in nitric acid of the concentration just used. To confirm the presence of mercury, pour 5 cc. of hot aqua regia over the precipitate on the filter, catching the filtrate in a test tube. Add stannous chloride solution in some excess. The white precipitate, which usually darkens, indicates mercury.

To the filtrate (1) containing the nitrates of the remaining members of the group, add 10 cc. of dilute sulfuric acid and evaporate until at least three-fourths of the liquid is removed. (Hood.) *Cool*, and dilute with 10 cc. of water. Lead sulfate is insoluble and appears as a white precipitate. Filter. (2.)

Test for lead. Prepare a few cubic centimeters of ammonium acetate solution by adding acetic acid in slight excess (litmus) to 10 cc. of ammonium hydroxide. Heat this solution and pour it once or twice over the supposed precipitate of lead sulfate on the filter paper. To this solution add a few drops of potassium chromate solution. The yellow precipitate of lead chromate is proof of the presence of lead.

To solution (2), now containing only sulfates of copper and bismuth, add ammonium hydroxide until the solution is neutral (litmus) and then 5 cc. in excess. Filter. (3.)

Test for copper. The blue color produced by adding ammonium hydroxide is usually sufficient indication of copper, but if only a trace of copper is present, the blue color may not be noticed. Neutralize a portion of the blue solution (3) with acetic acid and add a drop of potassium ferrocyanide solution. The reddish brown precipitate is a very delicate test for copper.

Test for bismuth. To 5 cc. of stannous chloride solution add sodium hydroxide with shaking until the precipitate redissolves. Pour some of this solution over the paper through which the blue ammoniacal solution was filtered. The glossy black precipitate is proof of bismuth.

Study this procedure carefully, and obtain from the assistant

an unknown solution and determine which of these ions are present.

QUESTIONS.

1. Write equations for all the reactions which take place when a solution containing nitrates of lead, mercury, copper, and bismuth, is treated by the scheme outlined in this exercise.
2. If zinc nitrate had been present in this solution along with the other metal compounds, explain why zinc sulfide would not precipitate with this group.
3. What is the precipitate formed when bismuth chloride is diluted with water? How could you prevent this precipitate from forming?
4. The sulfides of tin, antimony, and arsenic are also precipitated by hydrogen sulfide from acid solution. They are separated from the copper group by warming with ammonium polysulfide solution. Write equations for the reaction of these sulfides with ammonium polysulfide.
5. Show by an equilibrium diagram why lead sulfate dissolves in ammonium acetate solution.

EXERCISE XXIX.

ELECTROMOTIVE CHEMISTRY.[1]

MATERIALS: Copper strips, iron nails, tin, zinc (mossy), zinc strips. *Solutions:* Copper sulfate, mercuric chloride (0.2 N), phenolphthalein, potassium dichromate, sodium chloride, zinc sulfate.

SPECIAL APPARATUS: Carbon rods, copper strips, copper wire, lead strips, porous cups, zinc strips, voltmeter.

1. Displacement Reactions. Place a small piece of zinc in dilute sulfuric acid for a few minutes. When the evolution of hydrogen has become brisk, feel of the test tube. In what form is the energy of this reaction liberated? Write the equation for this reaction electronically. Which element is oxidized, and which one is reduced in this reaction?

Try the action of zinc on copper sulfate solution. Again endeavor to note any manifestation of energy, and state which element is oxidized and which reduced.

2. Couples. Place a zinc and a copper strip (not touching each other) in the same solution of very dilute sulfuric acid. Note at which metal strip the hydrogen is evolved. Now connect the two metals by a wire and note any difference in the result.

Wrap a small piece of zinc firmly around each end of a small bright wire nail. Attach pieces of tin in the same way to a second nail, and copper wire to a third. Place these nails in separate small beakers (or in one large beaker, provided they do not touch each other), cover them with water, and let them stand until the next exercise. At the next period note carefully the appearance of the different nails. Which has rusted to the greater extent? Explain. (**399**.)

3. Electrical Energy from Chemical Reaction. (*a*) Obtain two copper and two zinc electrodes. Bend over the top of each electrode at right angles so that they will hang on the edge of a small beaker and place one copper and one zinc strip in the first beaker. Amalgamate the second zinc strip by dipping it for several minutes

[1] Students may be permitted to work in pairs on this exercise.

in a dilute solution of mercuric chloride. Rinse, and place this amalgamated electrode, together with a copper strip, in a second beaker. Connect these two cells in series (*i.e.*, join one zinc strip to the copper strip of the other cell). Add 10 cc. of concentrated sulfuric acid to 200 cc. of water and pour some of this dilute acid into each beaker. Note the effect of the acid on each pole. Attach a copper wire to each of the remaining terminals and join the ends of these wires. Note any action at each of the four electrodes.

(*b*) Disconnect the connecting wires and dip one end of each into dilute sulfuric acid. Hydrogen is the gas evolved. What is the sign of the terminal at which this gas is liberated? What is formed at the other terminal?

(*c*) To a few cubic centimeters of sodium chloride solution add a drop of phenolphthalein solution and insert the terminals of your battery in this solution. Note, and explain the results. Is the cell used in these experiments a polarizing or a non-polarizing type of cell? Your observations in (*a*) should decide this point.

4. The Daniell Cell. Secure two small porous cups. In each place a solution of zinc sulfate and insert a zinc electrode into this solution. Place the porous cups in separate beakers containing copper sulfate solution into which dip copper electrodes. Connect the two cells in series as before. Join the terminals and let the cell run for some minutes. Observe carefully whether there is any visible reaction at either electrode. Is the cell of the polarizing or non-polarizing type?

To demonstrate that electrical energy is being evolved, perform the experiments (*b*) and (*c*) of section 3. If a voltmeter is available, determine the voltage of a single unit of your battery.

5. The Plunge Battery. Insert a copper and an amalgamated zinc electrode into very dilute potassium dichromate solution which has been acidified with a few cubic centimeters of dilute sulfuric acid. Connect the terminals and short circuit the cell until the end of the exercise. Explain the change in color of the dichromate solution. Write, electronically, the equation for the reaction which produced electrical energy in this cell.

6. The Lead Storage Cell. Place two lead electrodes in dilute sulfuric acid (10 cc. of concentrated sulfuric acid in 100 cc. of water). Pass a direct current through this cell — use a 60 W. bulb in series — for a few seconds. Disconnect the battery and short

circuit the cell for a minute by connecting the poles with a copper wire. Repeat the charging and discharging two or three times.

Determine the voltage of the charged cell by means of a voltmeter. Note and explain the appearance of the electrodes of the charged cell. Remove the electrodes and pour a few drops of hydrochloric acid over each. Note the odor of any gas evolved. What compound on the pole could react with hydrochloric acid in this manner?

7. Hydrogen Oxygen Storage Cell. Place two rather porous carbon rods in dilute sulfuric acid and pass a direct current through the cell for a few moments. What gases are evolved during this electrolysis? Write electron equations to account for their formation. Note that the gas has a tendency to cling to the carbon rods.

After electrolyzing this solution for a brief period, take the cell to your desk, being careful not to jar loose the bubbles of gas adhering to the poles. Obtain a voltmeter and determine whether electrical energy may be obtained from this storage cell. Write an equation to account for the production of electrical energy from such a cell. Could this cell be of any commercial value? Why?

QUESTIONS.

1. In what form is the energy of chemical reaction usually manifested?
2. What kind of reaction involves a transfer of electrons?
3. What must be done in order to obtain an electric current from a chemical reaction?
4. Show electronically the source of the current in cells based on the following materials: zinc — silver nitrate; cadmium — mercuric sulfate; iron — chlorine water; ferrous sulfate — potassium permanganate; stannous chloride — potassium dichromate.
5. What are the substances whose reaction is the source of electrical energy in a charged storage cell, and what products result from their reaction?
6. What substances are formed during the electrolysis of sulfuric acid between poles coated with lead sulfate?
7. In what form is energy stored in the storage cells?
8. Of what importance are the storage cells?

EXERCISE XXX.

CARBON MONOXIDE. SATURATED HYDROCARBONS AND DERIVATIVES.

MATERIALS: Acetic acid (glacial), ammonium sulfate, amyl alcohol, calcium carbide, carbon disulfide, cotton, cottonseed oil, cupric oxide, ethyl alcohol, gasoline, iodine, lard, methyl alcohol, "norite," oxalic acid, potassium cyanate, salicylic acid, soda-lime, sodium acetate (fused), sodium chloride, sodium hydroxide, wood chips. *Solutions:* Bromine in carbon tetrachloride (5%), calcium hydroxide, copper sulfate, formalin, glucose, potassium dichromate, potassium permanganate, silver nitrate, sodium potassium tartrate.

SPECIAL APPARATUS: Pyrex test tube (60 cc.).

1. Preparation of Carbon Monoxide. In a large pyrex tube place 5 g. of solid oxalic acid and 15 cc. of concentrated sulfuric acid. Provide the test tube with a one-hole rubber stopper carrying a delivery tube. Support the tube in a clamp on the lamp stand and warm the tube very gently until a good evolution of gas is obtained. Pass the gas for a moment through a little limewater. What gas other than carbon monoxide is a product of this reaction? Light the gas for a moment as it issues from the delivery tube. Observe the color of the flame. Do not let the gas burn very long.

2. Reducing Action of Carbon Monoxide. Place 0.5 g. of cupric oxide in a large-bore hard glass tube. Tap the tube until the oxide is spread out into a thin layer. Connect the tube to the delivery tube of the carbon monoxide generator and heat the cupric oxide strongly for several minutes, keeping up a good flow of carbon monoxide. This may be ignited at the end of the reduction tube to prevent its escape into the room. Allow the apparatus to cool and note any change in the appearance of the cupric oxide. Let the sulfuric acid in the generator cool before attempting to clean the test tube.

3. Preparation of Methane. Grind together in a mortar 3 g. of fused sodium acetate and 6 g. of soda-lime ($NaOH \cdot CaO$). Place this mixture in a test tube provided with a stopper and delivery tube and arrange to collect a gas over water. Heat the mixture, allowing the first part of the gas to escape in order to expel

the air, and then collect a small bottle of the gas. Burn the collected gas, noting the nature of the flame as it burns. This reaction is a very general one for preparing the saturated hydrocarbons.

In the hood, drop a small lump of calcium carbide into 10 cc. of water in a small bottle and after a moment ignite the gas. Compare the combustion of the acetylene produced in this reaction with that of methane. Acetylene is an unsaturated hydrocarbon, and will be studied further in Ex. XXXI.

4. Reaction of the Saturated Hydrocarbons with Halogen. To 10 cc. of gasoline (a mixture of hydrocarbons of the methane series), add 5 cc. of a 5% solution of bromine in carbon tetrachloride. Divide the mixture into two equal portions and place one portion in a dark place in your desk. Expose the second portion for ten minutes to direct sunlight. Compare the solutions in the two tubes. What causes the fuming in the tube which was exposed to light? Represent the reaction by an equation, using C_7H_{16} as a representative hydrocarbon. Note that sunlight greatly aids a reaction of this type.

5. Distillation of Wood. Partly fill a test tube with hard-wood sawdust, or chips. Provide the tube with a stopper and delivery tube and heat the tube strongly. Try to ignite the gases first given off. Mention some substances present in these gases. Extinguish the flame and allow a few drops of the liquid distillate to fall into a few cubic centimeters of water. Test this solution with litmus. What acid is present? What is the residue which remains in the tube after heating?

6. Oxidation Product of Alcohols. Acidify 5 cc. of potassium dichromate solution with sulfuric acid, add 5 cc. of methyl alcohol, and warm gently. When the solution changes color, smell of the vapors coming from the test tube. The pungent odor is formaldehyde (HCHO) formed by the oxidation of the alcohol. Write the electron equation for this reaction. The valence change for carbon is from 2^- to 0.

Acidify 2–3 cc. of potassium permanganate solution with dilute sulfuric acid, add 5 cc. of ethyl alcohol, and warm until the solution is colorless. Note the rather pleasant odor of acetaldehyde formed during the oxidation. Represent the reaction by an electron equation.

7. Oxidation of Aldehyde. To one-third of a test tube of "formalin"— a water solution of formaldehyde — add 5 cc. of

potassium permanganate solution and warm (do not boil) until the purple color changes to a brown. Let the precipitate of manganese dioxide settle a little and test the solution with litmus. Some formic acid was formed by the oxidation of the aldehyde.

8. Reducing Action of Aldehydes. Since aldehydes can be oxidized, as shown above, they are reducing agents. Select a clean-appearing test tube and boil in it 15 cc. of sodium hydroxide, — to remove grease, — then rinse thoroughly with water. Place about 5 cc. of silver nitrate solution in the test tube and add dilute ammonium hydroxide until the first precipitate just dissolves. Add 1 cc. of formalin, mix, and set the tube in lukewarm water for a few minutes. Mirrors are usually silvered by a reaction similar to this. If the glass is not very clean, the silver will not form a good reflecting surface.

Mix 3–5 drops of copper sulfate solution with 5 cc. of a solution of sodium potassium tartrate, and make strongly alkaline with sodium hydroxide. Heat to boiling and add a few drops of glucose solution. After a few minutes again heat to boiling. The red precipitate is cuprous oxide. Glucose is a sugar containing an aldehyde group, which causes reduction of the copper. This is a standard test for this type of sugar.

9. Esterification. Warm together in a test tube about 5 cc. each of ethyl alcohol and acetic acid to which has been added 1 cc. of concentrated sulfuric acid. Note the characteristic odor of the product. Equation?

In a test tube warm 0.5 g. of salicylic acid with 5 cc. of methyl alcohol and 1 cc. of concentrated sulfuric acid. The compound formed is methyl salicylate — $HOC_6H_4COOCH_3$. Describe its odor.

Heat together 5 cc. of amyl alcohol ($C_5H_{11}OH$) with an equal amount of acetic acid and 2–3 cc. of concentrated sulfuric acid. After warming a few minutes note and describe the characteristic odor of this ester. Equation? Esters usually have a pleasant odor and are often employed to imitate fruit flavors.

10. Unsaturated Esters. Fats and oils are esters of glycerine with certain " fatty " acids. Fats are esters containing a saturated acid, while oils contain an unsaturated acid. To demonstrate this, dissolve a tiny crystal of iodine in 5 cc. of carbon disulfide and add an equal volume of cottonseed oil. Mix and let stand half an hour — or until the next exercise. Explain the disappearance of the color due to dissolved iodine.

11. Cellulose Nitrate. Add about 10 cc. of concentrated sulfuric acid to an equal volume of concentrated nitric acid, and mix the acids well. While the mixture is still hot, add a small wad of cotton (not over 0.5 g.). Allow this to soak for five minutes, then remove it and place it in a large volume of water. Wash the cotton repeatedly in fresh water to remove all the acids, finally squeeze it as dry as possible and set aside until thoroughly dry. Using the tongs, hold a little of dry substance in a flame. Result? Guncotton is a more completely nitrated product than the ester you have just prepared.

12. Soap. Weigh 20 g. of lard into a beaker. Dissolve 5 g. of sodium hydroxide in 5 cc. of water, add this to the lard and heat the mixture for an hour by dipping the small beaker into a larger one containing boiling water. Stir the mixture until it hardens. The product is a crude soap. Represent the reaction by an equation. (**429.**) Cut the soap into fine pieces and dissolve most of it in about 20 cc. of hot water. Add 100 cc. of saturated sodium chloride solution and set the solution aside until the next exercise. Soap is not very soluble in salt solution and will separate in reasonably pure condition.

Dissolve a few shavings of soap in a test tube of hot water. Cool, and acidify the solution with a few drops of concentrated hydrochloric acid. What is the precipitate?

13. Wöhler's Experiment. Weigh 12 g. of potassium cyanate and 24 g. of ammonium sulfate and dissolve them in the least possible amount of water. Evaporate the solution to dryness on the steam bath (not over a free flame). Powder the residue and extract with two or three 10 cc. portions of hot alcohol. Decolorize the alcohol extract with a little "norite," and filter into a porcelain dish. As the alcohol evaporates, urea crystallizes in white needles.

Ammonium sulfate reacts with potassium cyanate in solution, forming ammonium cyanate. During the evaporation of the solution this latter substance undergoes molecular rearrangement into its *isomer*, urea.

$$2\ KOCN + (NH_4)_2SO_4 \longrightarrow K_2SO_4 + 2\ NH_4OCN$$

$$NH_4{-}O{-}C{\equiv}N \longrightarrow C(=O)(NH_2)(NH_2)$$

QUESTIONS.

1. What differences in the appearance of the flame were noted in the case of burning acetylene, methane, and carbon dioxide?
2. Write equations for the reactions involved in the preparation of ethane from CH_3CH_2COONa, and of benzene from C_6H_5COONa by methods similar to that used for methane.
3. What is saturated hydrocarbon? In what manner may such substances react with the halogens?
4. What products are obtained from the destructive distillation of wood?
5. What product is formed from the mild oxidation of an alcohol? By the stronger oxidation of an alcohol in solution? By the oxidation of an aldehyde?
6. What is esterification? What is the purpose of sulfuric acid in the reaction of esterification?
7. What is the difference between a fat and an oil of about the same molecular weight?
8. How might an oil be converted into a fat? (Compare sec. 10.)
9. How may glycerine be obtained from a fat?
10. What is a soap? What is the effect of adding a strong acid to a soap?

EXERCISE XXXI.

UNSATURATED HYDROCARBONS AND DERIVATIVES.

MATERIALS: Benzene, calcium carbide, coal (bituminous), dimethyl aniline, ice, sodium carbonate, sodium chloride, sodium nitrite, sulfanilic acid. *Solution:* Bromine water.

SPECIAL APPARATUS: Dropping funnel, thermometer.

1. Preparation of Acetylene. Provide a 100 cc. bottle with a two-hole rubber stopper carrying a dropping funnel and delivery tube. If a dropping funnel is not available, a substitute may be made by connecting a short-stem funnel or thistle tube to a glass tube of suitable length by means of a short rubber connector, and closing the rubber connector with a pinch cock (Fig. 9). Place several small pieces of calcium carbide in a bottle and allow water to drop slowly on to the carbide. Collect a bottle of the gas over water. Remove the bottle of acetylene to the hood and set fire to the gas. Result?

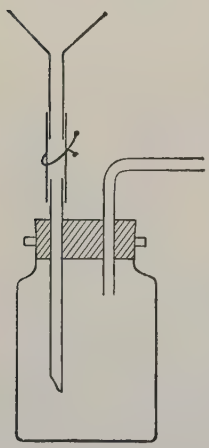

FIG. 9.

2. Addition of Bromine by Acetylene. Allow acetylene to bubble for some time through a few cubic centimeters of bromine water. The loss of color is caused by the addition of bromine to the unsaturated acetylene. Equation? *Addition* of halogens is typical of unsaturated hydrocarbons. Compare XXX, 4, 10.

3. Distillation of Coal. Place 10 g. of powdered bituminous coal in a test tube provided with a stopper and delivery tube. Heat the tube strongly and try to ignite the vapors which issue from the delivery tube. What substances are among the gaseous products? What is the thick liquid which collects in the delivery tube?

4. Nitration of Benzene. In a small flask mix about 10 cc. of concentrated sulfuric acid with an equal amount of concentrated nitric acid. To the mixed acid add, drop by drop, with shaking,

5 cc. of benzene. After the benzene is added place the flask in a beaker of warm water for 30 minutes, then pour the nitration mixture into a large volume of cold water. Crystals of di-nitrobenzene should separate on short standing. Smell of the product. The odor is due to mono-nitrobenzene, some of which is always formed along with the di-nitro-compound. If the nitrating mixture were not heated, mono-nitrobenzene only would be obtained. The nitration of benzene is the first step in the preparation of a great many " coal tar products."

5. Preparation of Methyl Orange, a " Coal Tar Dye." Prepare the following solutions:

(*a*) 12 g. of dimethyl aniline in 12 cc. of concentrated hydrochloric acid and 40 cc. of water.

(*b*) 5 g. of anhydrous sodium carbonate in 200 cc. of water.

(*c*) 7 g. of sodium nitrite in 40 cc. of water.

Weigh 20 g. of sulfanilic acid and dissolve it in the solution of sodium carbonate. Do not heat in order to effect solution. To this solution add the solution of sodium nitrite and cool the whole solution by immersing the beaker in a freezing mixture of ice and salt. To the cold solution add, *a drop at a time*, 8 cc. of concentrated hydrochloric acid. Stir the solution constantly and try to keep the temperature below 10°. Add the dimethyl aniline dissolved in hydrochloric acid. Make the solution just alkaline (litmus) with sodium hydroxide, and add 20 g. of sodium chloride to "salt out" the dye. After half an hour filter the precipitated solid by suction, wash with a little cold water, and dry at room temperature. The dye may be purified by a crystallization from a very little hot water.

Dissolve a pinch of the solid in a few cubic centimeters of water and divide the solution into two parts. To one, add a few drops of some acid, and to the other, a few drops of a base. Could this dye be used as an indicator for acids and bases?

QUESTIONS.

1. How is calcium carbide made commercially? Write equations for the reactions which occur during its preparation.
2. Using graphic formulas, show the reaction of acetylene with bromine.
3. Mention several substances obtained from the destructive distillation of coal.
4. Why is sulfuric acid used with the nitric acid in making nitrobenzene?
5. What is formed when nitrobenzene is reduced with hydrogen?
6. Why is nitration an important process in chemical industry?

EXERCISE XXXII.

DETERMINATION OF A TRANSITION POINT.

MATERIALS: Copper sulfate, mercuric chloride, potassium iodide, sodium sulfite.

SPECIAL APPARATUS: Thermometer.

Blow a small bulb on one end of a glass tube about 12 cm. long and introduce a little dry cupro-mercuric iodide [1] into this bulb. Support the tube in such a way that the bulb is about in the middle of a beaker of water. Heat the water, keeping it well stirred, and note the approximate temperature at which the salt begins to turn color. Now cool to at least 5° below this approximate temperature and reheat very slowly (about one degree per minute), this time noting as closely as possible the temperature at which the color change begins. Then allow the bath to cool and read the temperature at which the reverse change starts. Average these values, which may be several degrees apart, and record the average. Repeat the determination twice.

The values obtained by heating at this rate will not be accurate, for sufficient time is not allowed for equilibrium to become established, but by approaching the point from both directions, a reasonably close value may be obtained. Moisture, or other impurity, in the salt will affect the transition point.

[1] Cupro-mercuric iodide is readily prepared in the following manner: To a solution of 5 g. of mercuric chloride in 50 cc. of water add 12 g. of potassium iodide in 25 cc. of water. Dissolve 10 g. of sodium sulfite in 35 cc. of water, acidify with 5 cc. of concentrated sulfuric acid and pour this at once into the clear solution of potassium mercuric iodide. Immediately add 8 g. of copper sulfate dissolved in 50 cc. of water. Stir for a few minutes and filter the precipitated salt. A very little of this substance suffices, and the same material may be used indefinitely.

EXERCISE XXXIII.

PREPARATION OF LEAD DIOXIDE.

MATERIALS: Lead acetate (cryst.), sodium hypobromite solution.

One method for the preparation of the oxides of non-metals consists of decomposing the corresponding acid. This method is applied in the following preparation of lead dioxide. Lead acetate in solution is converted into the insoluble lead hydroxide, $Pb(OH)_2$, by the excess sodium hydroxide contained in the solution of sodium hypobromite used as the oxidizing agent. The divalent hydroxide is oxidized by the hypobromite to the tetravalent hydroxide, $Pb(OH)_4$, an acid, which is unstable at the temperature employed and decomposes into the dioxide and water.

$$Pb(C_2H_3O_2)_2 + 2\ NaOH \longrightarrow Pb(OH)_2 \downarrow + 2\ NaC_2H_3O_2.$$
$$Pb(OH)_2 + H_2O + NaBrO \longrightarrow Pb(OH)_4 \downarrow + NaBr.$$
$$Pb(OH)_2 \longrightarrow PbO_2 \downarrow + 2\ H_2O.$$

Dissolve 34 g. of crystallized lead acetate in 200 cc. of hot water, using a flask of suitable size, and cool this solution to room temperature by holding the flask under the tap. If a little of the salt crystallizes on cooling, it makes no difference in the experiment. Transfer this cold solution to a 600 cc. beaker and add slowly, with constant stirring, 200 cc. of sodium hypobromite solution. When all the hypobromite is added, heat the mixture to boiling and boil for ten minutes. During the boiling keep the mixture well stirred, for a suspension of a heavy solid is likely to settle to the bottom and cause bumping, which may spatter the liquid out of the vessel, or even break the beaker. After heating, let the chocolate-colored solid settle for about five minutes, and carefully decant or siphon off as much as possible of the clear liquid, leaving the residue undisturbed. How could you determine whether or not any of the lead salt remains in this liquid? Nearly fill the beaker with water, heat to boiling, let the solid settle, and again decant the clear liquid. Repeat the washing by decantation twice. In the last washing, allow the solid to settle a little longer than usual, and remove all the water possible. Transfer the sludge to a porcelain evaporating dish and heat on the steam bath for several hours. When the solid is thoroughly dry, pulverize and weigh it. Calculate the percentage yield which you obtained.

EXERCISE XXXIV.

PREPARATION OF CHROMIC ANHYDRIDE FROM SODIUM DICHROMATE.

MATERIALS: Sodium dichromate.

The method employed in the preparation of this acidic oxide is similar to that used in the case of lead dioxide (XXXIII). In this case, however, the acid formed (chromic acid) is dehydrated by the excess sulfuric acid present, this causing chromic anhydride to precipitate.

Dissolve 80 g. of sodium dichromate — $Na_2Cr_2O_7 \cdot 2\ H_2O$ — in 200 cc. of warm water. Cool the solution and filter or decant from undissolved impurities. Add slowly, with constant stirring, about 150 cc. of concentrated sulfuric acid, until a slight permanent precipitate is formed. At this point let the solution cool for some time (half an hour or more) and then add slowly, with stirring, enough more concentrated sulfuric acid to bring the total amount of acid to 360 cc. Cover the beaker with a cover glass and let it stand over night at least. Filter the precipitated material by suction, using a fine porcelain sieve and no filter paper. At first, considerable solid will run through the filter, so the filtrate must be poured back through the filter until it is clear. Wash the residue on the filter with three 10 cc. portions of concentrated nitric acid, and suck it as dry as possible. Transfer the anhydride to a porcelain dish and heat it with a very low flame until fumes of nitric acid are no longer given off. Do not heat hot enough to melt the anhydride. If the product is not to be immediately used, preserve it in a glass-stoppered bottle.

EXERCISE XXXV.

PREPARATION OF AMMONIUM DICHROMATE.

MATERIALS: Chromic anhydride, concentrated ammonium hydroxide.

Dissolve 50 g. of chromic anhydride in 100 cc. of water in a flask of suitable size. Calculate the volume of 14 N ammonium hydroxide (the concentrated laboratory reagent) required to react with this weight of the anhydride according to the equations:

$$CrO_3 + H_2O \longrightarrow H_2CrO_4.$$
$$H_2CrO_4 + NH_4OH \longrightarrow NH_4HCrO_4 + HOH.$$
$$2\,NH_4HCrO_4 \longrightarrow (NH_4)_2CrO_4 + H_2O.$$

Add the calculated amount of ammonium hydroxide to the solution of chromic anhydride, taking care not to allow the solution to become hot enough to boil off much ammonia. Pour the liquid into a shallow dish and set it aside to crystallize. After removing one crop of crystals, the filtrate may be further concentrated and a second crop obtained.

EXERCISE XXXVI.

PREPARATION OF BORIC ACID.

MATERIALS: Borax, methyl orange solution.

Borax, sodium tetraborate, is the usual source of boric acid. Since boric acid is weak, it is readily displaced from its salts by a stronger acid and its sparing solubility in cold water permits it separation and purification. Note that although borax is a salt of tetraboric acid, it is the ortho- acid which crystallizes in this preparation. Write the equation for the reaction. (**189**.)

Dissolve 48 g. of crystallized borax, $Na_2B_4O_7 \cdot 10\ H_2O$, in 150 cc. of boiling water, using a flask of appropriate size. To this solution add a few drops of methyl orange solution (an indicator which is yellow in neutral or alkaline solution and pink in acid solution). Add concentrated hydrochloric acid a little at a time until the solution turns distinctly pink and remains pink after shaking it and allowing it to stand for a short time. Thoroughly cool the flask under the tap and drain the crystals on a suction filter.

These first crystals are not pure. To obtain a better product, dissolve the solid in 150 cc. (or less, if possible) of hot water, and again cool the solution and filter off the solid as before. Let the product dry in your desk until the next exercise. Calculate the theoretical yield and the per cent yield which you obtained.

EXERCISE XXXVII.

PREPARATION OF ARSENIC ACID.

MATERIALS: Arsenic trioxide.
SPECIAL APPARATUS: Porcelain casserole (500 cc.).

Weigh 25 g. of arsenic trioxide into a 500 cc. casserole and add 10 cc. of water. Take the casserole to the hood and add 40 cc. of concentrated nitric acid. Warm sufficiently to keep up a reaction but avoid boiling, which would drive off nitric acid. After some time, when brown fumes are no longer evolved, the arsenic trioxide should have dissolved completely, leaving a clear solution. If any solid remains, add 10 cc. more nitric acid and 5 cc. of concentrated hydrochloric acid and continue the heating until solution is complete. Evaporate the solution to dryness, holding the casserole in the hand and rotating it constantly in order to prevent spattering. Near the end, the liquid will become quite syrupy, and the casserole should then be removed from the flame for a moment, and the evaporation carried out very carefully. Overheating will decompose the residue — arsenic pentoxide — into arsenic trioxide, with which you started.

Dissolve this residue in 30 cc. of cold water, and filter the solution. The pentoxide dissolves rather slowly, but it should dissolve completely in this volume of water. If it does not, some of the trioxide is present, and the oxidation must be repeated. The final product is a fairly concentrated solution of ortho arsenic acid. If this solution is very carefully heated until the boiling point of the solution rises to 160°, crystals of the composition $(H_3AsO_4)_2 \cdot H_2O$ will separate on cooling.

EXERCISE XXXVIII.

PREPARATION OF COPPER AMMONIA SULFATE.

MATERIALS: Copper sulfate (cryst.), ethyl alcohol.
SPECIAL APPARATUS: Dropping funnel (125 cc.).

Dissolve 25 g. of very finely pulverized blue vitriol in 85 cc. of dilute ammonium hydroxide (6 N). Solution is most easily accomplished by adding the powder in small portions to the liquid, stirring thoroughly as it is added. If any undissolved crystals remain, pour the liquid into another clean beaker and then back into the first beaker, and so back and forth until it is seen that all the copper sulfate is in solution. Place 125 cc. of ethyl alcohol in a 300 cc. wide-mouth bottle, and then run 20 cc. of water to the bottom of the bottle by the aid of a dropping funnel. The stem of the funnel must be completely filled with water so as to prevent air being forced down with the water and thus disturbing the liquids. To accomplish this it is best to measure 20 cc. of water into a small beaker and suck up enough of this to fill the stem of the funnel, then turn off the stop cock and pour the rest of the water into the top of the funnel. When the water has been run under the alcohol, withdraw the funnel carefully and fill it, as before, with the ammoniacal copper sulfate solution, and carefully run in the whole of the blue liquid to the bottom of the bottle. Cork the bottle and set it aside, without mixing the layers of liquids, where it will be quite undisturbed for a week or more. When good crystals have separated from the solution, decant the liquid through a large filter and shake out the crystals. Spread the crystals on dry filter paper, without breaking them any more than necessary. After a short time transfer them to a new paper, and again spread them out. Repeat this until the solid appears dry. Preserve the crystals in a stoppered bottle, as they give off ammonia quite readily.

EXERCISE XXXIX.

PREPARATION OF SODIUM THIOSULFATE.

MATERIALS: Sodium carbonate (cryst.), sulfur (flowers), sulfur dioxide (cylinder).

SPECIAL APPARATUS: Porcelain dish (400 cc.).

Weigh out two 143 g. portions of crystallized sodium carbonate and dissolve one portion of the salt in 300 cc. of hot water in a large flask. Take the flask to the hood and pass into the solution a rapid stream of sulfur dioxide from a cylinder of the liquid substance. At first there will be a rapid effervescence of carbon dioxide. When this effervescence has ceased, and sulfur dioxide escapes freely from the solution, shut off the gas. What is now in solution? Add the remaining 143 g. of sodium carbonate to the solution in rather small portions. Boil the solution for 10 minutes to drive off excess sulfur dioxide, and then transfer it to a large beaker. Weigh 32 g. of powdered sulfur, add it to the solution of sodium sulfite, and boil the solution gently until practically all of the sulfur has dissolved. This will take at least an hour to an hour and a half. Water should be added from time to time to replace that lost by evaporation. When all, or nearly all, of the sulfur has gone into solution, evaporate to a volume of about 200 cc. and set the liquid aside in a porcelain dish until it cools to 30°. If there is any unchanged sodium sulfite in solution, it will now separate. Filter, discard the solid, and set the solution aside in an uncovered dish until a good crop of crystals has separated. Since sodium thiosulfate readily forms a supersaturated solution, it is well to place a few seed crystals in the cold solution. Filter the solid and dry on coarse filter-paper at room temperature. Calculate the per cent yield which you obtained. The crystallized salt has the formula $Na_2S_2O_3 \cdot 5\ H_2O$.

EXERCISE XL.

PREPARATION OF CUPRIC AMMONIUM SULFATE.

MATERIALS: Ammonium sulfate, copper sulfate (cryst.).

Grind 50 g. of blue vitriol to a fine powder and dissolve it in 100 cc. of hot water in a 250 cc. flask. Weigh out an equivalent amount of ammonium sulfate and grind it sufficiently to break up any large lumps. When the copper sulfate has all dissolved, acidify the solution with a few drops of dilute sulfuric acid, add the ammonium sulfate, and heat until all of the salt dissolves. Filter the solution (hot) through a large folded filter into a clean beaker. Cover the beaker, wrap it in a towel so that it will cool more slowly, and set it aside to crystallize over night. Break up the crystals, drain them on the suction filter, and dry them on filter paper at room temperature.

EXERCISE XLI.

PREPARATION OF FERROUS AMMONIUM SULFATE.

MATERIALS: Ammonium sulfate, iron wire.

This salt may be prepared by dissolving equivalent amounts of ferrous sulfate and ammonium sulfate in an appropriate amount of water and allowing the solution to crystallize. The following table indicates the weights of the various salts required to saturate 100 g. of water, and should be used as a guide in determining the amount of solvent used in your preparation. You should aim to obtain the maximum yield of crystallized product.

Temperature	0°	10°	20°	30°	40°	50°	70°	90°
Ferrous sulfate	16	21	26	33	44	48	56	43
Ammonium sulfate	71	73	75	78	81	84	92	99
Ferrous ammonium sulfate	12	17	22	28	33	40	52	—

Starting with a quantity of iron wire not to exceed 11 g., convert the iron into ferrous ammonium sulfate. Submit an outline of your proposed procedure to the assistant and obtain his approval before beginning the experiment. Keep a careful record of the quantities of all reagents used and the volumes of your solutions. Allow the salt to crystallize in a covered dish until the next exercise. Weigh the dry crystals and report the per cent yield obtained, based on the weight of iron taken. The crystallized salt has the formula, $(NH_4)_2SO_4 \cdot FeSO_4 \cdot 6\ H_2O$.

EXERCISE XLII.

PREPARATION OF ALUM FROM CRYOLITE.

MATERIALS: Calcium oxide, carbon dioxide cylinder (or generator), cryolite, potassium sulfate.

SPECIAL APPARATUS: Two-liter wide-mouth bottle.

Add 23 g. of quicklime to 125 cc. of boiling water in a large evaporating dish or casserole. Add to this, in small portions, 25 g. of finely ground cryolite, thoroughly stirring in the powder as it is added. Heat the whole to boiling, stirring at the same time, and then boil gently for an hour. From time to time make up the loss due to evaporation by adding water, and stir up the sludge to prevent spattering and bumping. When the time is up, transfer the whole to an 800 cc. beaker, using plenty of water to rinse the heavy residue into the beaker. Dilute with enough hot water to fill the beaker and let the precipitate settle to within about one inch of the bottom. Pour off the liquid through a large folded filter, leaving the residue undisturbed, and catch the clear filtrate in a two-liter wide-mouth bottle. Fill the beaker again with hot water and stir thoroughly. When the residue has settled a second time, again filter into the same bottle, first pouring upon the filter the supernatant liquid and then the mud at the bottom of the beaker. Discard the *residue* and save the whole united filtrate for the next operation. Cover the mouth of the bottle with a cardboard and pass a fairly rapid stream of carbon dioxide into the solution until the precipitation is complete. This operation should occupy an hour or more. The completion of the reaction is indicated by the fact that the gas is no longer absorbed; this can be judged by watching the bubbles which collect on the surface. If they burst without diminishing in size, the reaction is probably complete. A test must be made by filtering off a test tube of the liquid and passing in carbon dioxide for several minutes. Siphon off the liquid, leaving the residue undisturbed, and wash once by filling the bottle with hot water and siphoning it off again. It is not necessary to wait until the cloud of very light aluminum hy-

droxide settles; this would take an inconveniently long time and the loss is trifling. What does the discarded liquid contain? Dilute 15 cc. of concentrated sulfuric acid with its own volume of water and add this to the residue in the bottle and stir well. Mark a 500 cc. beaker with a label at the height of 200 cc., transfer the contents of the bottle to the beaker and add 21 g. of solid potassium sulfate. Boil until the potassium sulfate is all dissolved, and then bring the liquid level to the 200 cc. mark either by evaporating further or by adding more water. Remove the burner and let the solution cool until the hand can be held on the bottom of the beaker for some time without discomfort. Scatter five seed crystals of alum in the solution, cover the beaker, wrap it in a towel, and set aside until the next exercise. Remove the crystals from the mother liquid, dry them carefully on filter paper, and preserve them. Evaporate the liquid over a low flame to half volume in a beaker marked at 100 cc., and leave to crystallize as before. Add this second crop to the first, and determine the total yield of alum which you obtain.

Look up the formula of cryolite, and write equations for all the reactions involved in this preparation.

EXERCISE XLIII.

PREPARATION OF CHROME ALUM.

MATERIALS: Ethyl alcohol, potassium dichromate.

Weigh out 100 g. of pulverized potassium dichromate, place this in a liter pyrex flask, and cover with 400 cc. of water. Add 80 cc. of concentrated sulfuric acid, and stir and warm until all the dichromate dissolves. Now cool the flask by shaking it under a stream of cold water from the faucet in such a way as to give the liquid a rotary motion, and add alcohol in small portions until 75 cc. has been added. The first 25 cc. of alcohol should not be added faster than two or three cubic centimeters at a time, and the flask must be thoroughly cooled between each addition; the later portions may go in somewhat more rapidly, but the cooling after each addition should be continued and on no account should the mixture be allowed to get to a temperature where it feels more than comfortably warm when the bottom of the flask is pressed against the palm of the hand. Transfer the contents of the flask to a beaker of convenient size, rinsing out any crystals that may stick in the flask with some of the solution, and leave the beaker uncovered until the next exercise. Pour off the liquid, using a filter if necessary, and dissolve the crystals in the least possible quantity of hot water, warming and stirring to hasten solution. Filter through a small folded filter, wrap the beaker in a towel, cover it, and set aside to crystallize. Dry the crystals finally obtained between filter papers and preserve in a stoppered bottle. The salt should not be allowed to stand exposed to the air for a very long time, as the crystals effloresce quite rapidly.

EXERCISE XLIV.

PREPARATION OF STRONTIUM CHLORIDE FROM STRONTIUM SULFATE.

MATERIALS: Sodium carbonate (anhyd.), strontium sulfate.
SPECIAL APPARATUS: Porcelain evaporating dish (500 cc.).

Grind 61 g. of strontium sulfate to a fine powder and add this gradually, with constant stirring, to a boiling solution of 73 g. of anhydrous sodium carbonate in 360 cc. of water in a large porcelain dish. When all the strontium sulfate has been added, keep the solution boiling gently for 30 minutes. During this operation the mixture should be watched and stirred constantly to prevent bumping. It is well also to add a little water from time to time to make up that lost by evaporation. Transfer the solution and solid to a tall beaker, washing out the dish with water. Let the solid matter settle for five minutes and decant, or siphon, as much of the liquid as possible without disturbing the solid. Add 400 cc. of fresh water, stir, let settle, and again decant. Wash three times in this manner. When the liquid has been drawn off for the last time, add concentrated hydrochloric acid, a little at a time, and stirring constantly, until effervescence ceases and the solution remains acid. Filter through a small filter into a convenient beaker. It may be necessary to pass the liquid several times through the filter to obtain a clear filtrate, but it is quite necessary that it should be clear. Transfer the solution to a small evaporating dish and heat over a small flame, with constant stirring, until, on blowing across the surface of the liquid, a thin crystal scum appears. Remove the burner, add 5 cc. of water, and cool. When perfectly cold, drain off as much of the mother liquid as possible through a small filter and scrape out the crystals with a spatula and press them between filter papers until they are dry. After being spread out exposed to air for 15 minutes they may be weighed. Calculate the per cent yield which you obtained. The crystals have the formula, $SrCl_2 \cdot 6\ H_2O$.

EXERCISE XLV.

PREPARATION OF POTASSIUM PERCHLORATE.

MATERIALS: Potassium chlorate, silver nitrate solution.
SPECIAL APPARATUS: Porcelain crucible (100 cc.).

Weigh 61 g. of potassium chlorate and place the salt in a clean porcelain crucible of not less than 100 cc. capacity. The glaze of the crucible must be in perfect condition. Two reactions are possible when potassium chlorate is heated.

(1) $2\ KClO_3 \longrightarrow 2\ KCl + 3\ O_2$.
(2) $4\ KClO_3 \longrightarrow KCl + 3\ KClO_4$.

Both reactions occur simultaneously, but the reaction expressed by equation (1) will be unduly favored by the presence of impurities, or by imperfections in the glaze.

Cover the crucible with a watch glass and heat gently until the salt melts. Then remove the cover glass and continue to heat sufficiently to keep up a *brisk* evolution of oxygen, but do not increase the heat when the liquid shows any tendency to solidify. After 30–40 minutes the contents of the crucible should begin to become a bit pasty, especially around the edges. Cool the crucible to room temperature, add 50 cc. of water, and allow it to stand until the fusion mass is disintegrated (at least over night). Filter the residue, which is largely potassium perchlorate, wash with cold water, and dry. Purify by crystallization from the calculated amount of hot water (refer to a solubility table) until a little of the salt fails to yield a chloride test. The pure salt should give no yellow color when a *little* is treated on a watch glass with concentrated sulfuric acid (chlorate test). About 30 g. of the pure product is the maximum yield to be expected.

EXERCISE XLVI.

PREPARATION OF OXALIC ACID.

MATERIALS: Cane sugar.
SPECIAL APPARATUS: Porcelain casserole (500 cc.).

Place 250 g. of concentrated nitric acid in a large porcelain casserole and heat to about 90°. *Take the casserole to the hood* and add, all at once, 50 g. of cane sugar. Allow the rather violent reaction to complete itself without further application of heat. When brown fumes are no longer given off, evaporate the liquid to one-third its volume, cool, and set aside to crystallize. Drain the crystals on a small porcelain filter plate, using no filter paper, and wash with 5 cc. of cold water. The mother liquor may be concentrated somewhat and a second crop of the acid obtained. This should be added to the first portion. Spread the crystals on coarse filter paper until thoroughly dry. If it is desired to remove the last traces of nitric acid, the solid may be recrystallized from a very little hot water.

EXERCISE XLVII.

PREPARATION OF MERCURIC THIOCYANATE.

MATERIALS: Ammonium thiocyanate, dextrin, ferric chloride solutions, mercury.

Weigh out 25 g. of mercury in a small evaporating dish by first carefully counterbalancing the dish and then adding mercury until the whole weighs 25 g. more than the counterbalance. Transfer to a larger dish and add 30 cc. of concentrated nitric acid (Hood), cover the dish with a watch glass, and warm gently until the metal has all disappeared. Heat the solution to boiling and add a little more concentrated nitric acid. If red fumes appear, cover the dish and boil them off, then repeat until the addition of more nitric acid produces no more red fumes. Remove the cover glass and evaporate slowly over a low flame until a crystal layer begins to form on the surface of the liquid. Transfer the liquid and crystals to an 800 cc. beaker, using hot water to rinse out the dish, and then make up the volume to 500 cc. with water. If a cloudy precipitate of basic salt results, dissolve it in a few drops of concentrated nitric acid. Add 10 drops of ferric chloride solution and then slowly add ammonium thiocyanate solution until the red color persists. Filter through a large filter and wash with cold water until the washings show no red color. Take the paper out of the funnel and spread out the precipitate on dry filter paper and allow it to dry over night in a warm place. Weigh the product to determine the yield.

Moisten some of the solid with sufficient dextrin solution to make a thick dough, work the mixture into a pellet with the fingers, and dry in a warm place for several hours. These are the so-called Pharaoh's serpent eggs. Place the " egg " on a porcelain plate in the hood and heat it with a Bunsen flame until it inflames. If the substance has been sufficiently dried, the reaction will continue of itself.

CONCENTRATION OF SOLUTIONS.

Solutions of the following concentrations will be found convenient except where otherwise specified.

Desk Reagents.

Ammonium hydroxide, conc.	14 N	Nitric acid, conc.	16 N
Ammonium hydroxide, dil.	4 N	Nitric acid, dil.	4 N
Hydrochloric acid, conc.	12 N	Sodium hydroxide	4 N
Hydrochloric acid, dil.	4 N	Sulfuric acid, conc.	36 N
		Sulfuric acid, dil.	4 N

Side-shelf Reagents.

Acetic acid	6 N	Ferrous (ammonium) sulfate	1 N
Acetic acid	1 N	Formalin	commercial
Aluminum chloride	2 N	Gelatin	1%
Aluminum sulfate	1 N	Gold chloride	1%
Ammonium acetate	6 N	Glucose ("Karo")	10%
Ammonium carbonate	6 N	Hydriodic acid	0.5 N
Ammonium chloride	2 N	Hydrobromic acid	0.5 N
Ammonium oxalate	0.5 N	Hydrochinon	0.2%
Ammonium polysulfide	6 N	Hydrochloric acid (standard)	0.5 N
Ammonium sulfide	6 N	Hydrogen sulfide water	Sat.
Antimony chloride	0.25 N	Iodine in alcohol	0.5%
Arsenic acid	1 N	Iodine in potassium iodide	0.1 N
Arsenic trichloride	1 N	Lead acetate	1 N
Arsenious acid	0.1 N	Lead nitrate	1 N
Barium chloride	1 N	Limewater	Sat.
Barium hydroxide	Sat.	Magnesia mixture	[1]
Bismuth trichloride	0.25 N	Magnesium chloride	1 N
Bromine in carbon tetrachloride	5%	Manganous sulfate	1 N
Bromine water	Sat.	Mercuric chloride	0.2 N
Cadmium sulfate	0.5 N	Mercuric nitrate	0.5 N
Calcium chloride	1 N	Mercurous nitrate	0.5 N
Calcium hydroxide	Sat.	Microcosmic salt	1 N
Chlorine water	Sat.	Molybdic acid mixture	[1]
Chromic chloride	0.3 N	Nickel sulfate	0.25 N
Cobaltous nitrate	1 N	Nickelous chloride	0.25 N
Copper sulfate	1 N	Phenolphthalein	[1]
Cupric chloride	2 N	Phosphoric acid in abs. alcohol	0.3 N
Ferric chloride	1 N	Potassium bromide	1 N
Ferric chloride	30%	Potassium chloride	1 N

[1] For these solutions, use the standard analytical reagents.

Potassium chromate	1 N	Sodium cobaltinitrite	[1]
Potassium dichromate	1 N	Sodium fluoride	0.25 N
Potassium ferrocyanide	1 N	Sodium hydroxide	50%
Potassium hydrogen pyroantimonate	[1]	Sodium hypochlorite	6 N
Potassium iodide	1 N	Sodium potassium tartrate	0.5 N
Potassium iodide	2 N	Sodium sulfate	1 N
Potassium permanganate	0.5 N	Sodium thiosulfate	1 N
Potassium thiocyanate	1 N	Stannic chloride	1 N
Pyrogallic acid (freshly prepared)	10%	Stannous chloride	1 N
Silver nitrate	0.1 N	Stannous chloride	2 N
Sodium acetate	3 N	Strontium chloride	1 N
Sodium arsenite	1 N	Sulfur dioxide	Sat.
Sodium carbonate	1 N	Tannin	0.5%
Sodium chloride	1 N	Water glass . . . density	1.1
		Zinc chloride	1 N
		Zinc sulfate	1 N

[1] For these solutions, use the standard analytical reagents.